Mallinckrodt™ Pharmaceuticals

INOmax DS IR® Plus

Operation Manual

(800 ppm INOMAX® (nitric oxide) for inhalation)

Series 3 software

Part No. 21204 Rev-03
2024-06

SN	20171234	The first four numeric digits indicate the year of product manufacture, and the next four digits are the sequential unit number produced.
REF	10007	INOmax DS_{IR} Plus, 800 ppm, English
REF	10078	INOmax DS_{IR} Plus, 800 ppm, Spanish

A CD-ROM is available upon request containing the full source code for the open source software used within this product. Portions of this software are copyright ©1996-2014 The FreeType Project (www.freetype.org). All rights reserved.

Korean fonts Baekmuk Batang, Baekmuk Dotum, Baekmuk Gulim, and Baekmuk Headline are registered trademarks owned by Kim Jeong-Hwan.

Mallinckrodt, the “M” brand mark and the Mallinckrodt Pharmaceuticals logo are trademark of a Mallinckrodt company. Other brands are trademarks of a Mallinckrodt company or their respective owner. ©2024 Mallinckrodt.

Contents

1 General Information 1-1
1.1 Indications for Use 1-1
1.2 Document Conventions 1-2
1.2.1 Text and Graphic Conventions 1-2
1.2.2 Terminology 1-3
1.2.3 Symbols Glossary 1-4
1.2.4 Device Icons Lookup 1-9
1.3 Conditions for Use 1-10
1.4 Before Using the INOmax DS_{IR} Plus 1-11
1.4.1 Warnings (Complete List) 1-11
1.4.2 Environmental Considerations 1-20
1.4.3 Effect of the INOmax DS_{IR} Plus in a Gas Delivery System Circuit 1-21
1.5 Introduction to the INOmax DS_{IR} Plus System 1-22
1.5.1 Overview of Main Components 1-23
1.5.2 The INOmax DS_{IR} Plus 1-24
1.5.3 The INOblender 1-25
1.5.4 INOMAX Cylinders 1-26
1.5.5 The INOmax DS_{IR} Cart 1-27
1.5.5.1 Mounting the INOblender and INOmax DS_{IR} Plus 1-28
1.5.6 The INOmeter and Infrared (IR) Communications 1-29
1.5.7 The Injector Module 1-30
1.6 INOmax DS_{IR} Plus Operation 1-31
1.6.1 INOmax DS_{IR} Plus Operational Flow 1-32
1.6.1.1 Maximum NO Delivery 1-33
1.6.2 Integrated Pneumatic Backup 1-33
1.7 The INOmax DS_{IR} Plus Interface 1-35
1.7.1 The Main Screen 1-36
1.7.2 Adjusting Dose Settings 1-38
1.7.3 Setting O_2, NO_2, and NO Alarm Limits 1-39
1.7.4 The Menu Screen 1-40
1.7.5 The Settings Screen 1-41
2 Setting Up Components 2-1
2.1 Providing Electrical Power to the INOmax DS_{IR} Plus 2-1
2.2 Loading INOMAX Cylinders onto the Cart 2-2
2.3 Connecting a Regulator to an INOMAX Cylinder 2-4
2.4 Attaching a Regulator Hose to the INOmax DS_{IR} Plus 2-5
2.5 Connecting the INOblender 2-6
2.6 Connecting the Injector Module 2-7
2.7 Checking the Water Separator Cartridge and Water Bottle 2-8
2.8 Attaching the Patient Gas Sample Line and Filter 2-8
3 Using the INOmax DS_{IR} Plus 3-1
3.1 Turning On the INOmax DS_{IR} Plus 3-1
3.2 Automated Pre-Use Checkout 3-2
3.2.1 Initial Connections 3-2
3.2.2 Automated Purge 3-3
3.2.3 Backup Delivery Test 3-4
3.2.4 Performance Test (INOmax DS_{IR} Plus) 3-4
3.2.5 INOblender Test 3-5
3.2.6 Depressurizing the Regulator Supply Line 3-6

3.3 Preparing for Patient Use **3-7**
3.3.1 Connecting to a Conventional Gas Delivery System 3-8
3.3.2 Using the INOmeter 3-10
3.3.3 Using the INOblender 3-13
3.3.3.1 Using the INOblender as a Stand-alone Backup Device 3-15
3.3.3.2 Using the INOblender Stand-alone Pre-use Checkout Procedure 3-16
3.3.3.3 Using the INOblender with the NeoPuff™ Infant Resuscitator 3-18
3.3.4 Integrated Pneumatic Backup 3-19
3.3.5 Connecting to Gas Delivery Systems 3-21
3.3.5.1 Circle Anesthesia System 3-22
3.3.5.2 Spontaneous Breathing Patient on a Mask 3-24
3.3.5.3 Spontaneous Breathing Patient on a Nasal Cannula 3-25
3.4 Using the INOmax DS_{IR} Plus **3-26**
3.4.1 Entering Patient Information 3-26
3.4.2 Monitoring the Environment 3-29
3.5 Acid Formation in the Humidifier or Breathing Circuit when Delivering INOMAX **3-30**
4 Using the INOmax DS_{IR} Plus During Transport **4-1**
4.1 Introduction **4-1**
4.1.1 Using the Transport Regulator/Cap Assembly 4-2
4.2 Using the INOmax DS_{IR} Plus and Cart for Transport within the Hospital **4-5**
4.3 Using the INOmax DS_{IR} Plus and INOblender Detached from the Cart **4-6**
4.3.1 Recommended Items to Have Available in Transport 4-6
4.3.2 Assembling and Attaching the Transport Mounting Bracket to a Transport Incubator 4-7
4.3.3 Moving the INOmax DS_{IR} Plus and INOblender from the Cart to the Transport Device 4-9
4.3.4 Connecting an INOblender Extension Hose 4-11
4.3.5 Connecting the Extension Hose when the INOblender is in Stand-Alone Mode 4-12
4.3.6 Reattaching the INOmax DS_{IR} Plus and the INOblender to the Cart 4-13
4.4 Using the INOblender for Transport as a Stand-alone Device **4-15**
4.5 Using a Separate INOmax DS_{IR} Plus for Transport **4-17**
4.5.1 Connecting to the Transport Ventilator Circuit 4-19
4.6 Running on Battery Power **4-21**
4.6.1 “Running on Battery” Alert 4-21
4.6.2 “Low Battery” Alarm 4-21
4.6.3 “Battery Failure” Alert 4-21
5 Calibrating Sensors **5-1**
5.1 Low Calibration for O_2, NO_2, and NO Sensors **5-2**
5.1.1 Automatic Low Calibration 5-2
5.1.2 Manual Low Calibration 5-3
5.1.3 Failed Sensor During Calibration 5-3
5.2 High Calibration for O_2, NO_2, and NO Sensors **5-4**
5.2.1 High Calibration for the O_2 Sensor 5-4
5.2.2 High Calibration for the NO_2 Sensor 5-9
5.2.3 High Calibration for the NO Sensor 5-15
6 Maintaining the INOmax DS_{IR} Plus **6-1**
6.1 Maintenance Overview **6-1**
6.1.1 Manufacturer Preventive Maintenance 6-1
6.1.2 User Responsibility 6-1
6.1.3 Single-Use Items 6-3

6.2 Changing INOMAX Cylinders **6-4**
6.3 Detecting NO Gas Leaks **6-6**
6.3.1 Inspecting the INOMAX Cylinder Regulator Tip 6-6
6.3.2 Searching for NO Leak Locations 6-6
6.4 Emptying the Water Bottle **6-8**
6.5 Replacing the Water Separator Cartridge **6-8**
6.6 Cleaning the INOmax DS_{IR} Plus System Components **6-9**
6.6.1 Cleaning, Disinfecting and Sterilizing the Injector Module 6-11
6.6.2 Cleaning the INOmeter 6-18
6.7 Storing the INOmax DS_{IR} Plus **6-18**
6.8 Replacing O_2, NO_2, and NO Sensors **6-19**
6.9 Returning the INOmax DS_{IR} Plus for Service **6-22**
7 Troubleshooting and Alarms **7-1**
7.1 Displaying Alarm Help **7-1**
7.2 Identifying and Resolving Alarms **7-2**
7.3 INOmax DS_{IR} Plus Alarm Specifications **7-16**
7.3.1 Auditory Alarm Signals 7-17
7.3.2 Monitor Alarm Delay Active Indicator 7-18
7.4 Displaying Alarm History **7-19**
7.4.1 Recent Alarms 7-19
7.4.2 Alarm History 7-20
8 Product Specifications **8-1**
8.1 General Specifications **8-1**
8.2 RS232 Data Output **8-6**
8.3 Electromagnetic Compatibility Information **8-8**
9 Appendices **9-1**
A Appendix A - Manual Pre-Use Checkout **9-3**
A.1 Confirm the Following are Attached: **9-3**
A.2 Assemble the Pre-use Circuit: **9-3**
A.3 Test for High Pressure NO Leaks: **9-4**
A.4 Manual Purge and Alarm Verification: **9-4**
A.5 Integrated Pneumatic Backup Test: **9-4**
A.6 Performance Test **9-5**
A.7 INOblender Test **9-5**
B Appendix B - Duration and Dilution Charts **9-6**
B.1 Duration Chart – INOMAX Cylinder 88-Size (Illustrative Only)* **9-6**
B.2 Duration Chart – INOMAX Transport Cylinder D-Size (Illustrative Only)* **9-7**
B.3 Oxygen Dilution Chart (Illustrative Only)* **9-8**
C Appendix C - Gas Delivery Systems Validated for Use in the U.S. (with the INOmax DS_{IR} Plus) 9-9
C.1 A-Plus Medical **9-12**
C.1.1 Babi-Plus Bubble CPAP 9-12
C.2 BD-CareFusion **9-13**
C.2.1 Airlife nCPAP System 9-13
C.2.2 Infant Flow SiPAP 9-14
C.2.3 3100A/B High Frequency Oscillatory Ventilator with Filtered Circuit 9-16
C.2.4 3100A/B High Frequency Oscillatory Ventilator with Rigid or Flexible Circuit 9-17

C.3 Bunnell **9-18**
C.3.1 Life Pulse, 203/204, High Frequency Ventilator Circuit 9-18
C.4 Fisher & Paykel Healthcare **9-22**
C.4.1 Bubble CPAP 9-22
C.4.2 RT329 Breathing Circuit and BC Nasal Cannula 9-23
C.4.3 RT202 Breathing Circuit & Optiflow Adult Interface 9-24
C.4.4 RT330 Breathing Circuit & Optiflow Jr 9-25
C.4.5 Airvo 2 Breathing Circuit 9-26
C.5 Hamilton Medical **9-27**
C.5.1 Arabella Nasal CPAP 9-27
C.6 Teleflex Medical OEM **9-28**
C.6.1 Comfort Flo Humidification System 9-28
C.7 Vapotherm Inc. **9-29**
C.7.1 2000i Respiratory Hydration Vapor Therapy 9-29
C.7.2 Precision Flow 9-30
D Appendix D - Gas Delivery Systems Used Outside the U.S. **9-31**
D.1 Acutronic Medical Systems AG **9-32**
D.1.1 Fabian +nCPAP Evolution 9-32
D.1.2 Fabian HFO Ventilator (High Frequency Mode) 9-34
D.1.3 Fabian HFO Ventilator (Conventional Modes Only) 9-35
D.1.4 Fabian HFOi Ventilator (High Frequency Mode) 9-36
D.1.5 Fabian HFOi Ventilator (Conventional Mode) 9-37
D.1.6 Fabian Therapy 9-38
D.2 Dräger **9-39**
D.2.1 Babylog VN500/Infinity Acute Care System 9-39
D.3 Metran Co., Ltd. **9-40**
D.3.1 Humming HMX 9-40
D.3.2 Humming HMX During HFOV Mode 9-41
D.3.3 Humming Vue Ventilator (Disposable Circuit) 9-42
D.3.4 Humming Vue Ventilator (Non-Disposable Circuit) 9-43
D.4 SLE **9-44**
D.4.1 Life Support SLE5000, Conventional and HFOV Modes 9-44
E Appendix E - Gas Delivery Systems that Failed Testing **9-45**
F Appendix F - Parts and Accessories **9-45**

Mallinckrodt™ Pharmaceuticals

INOmax DS IR® Plus

1/ General Information

Part No. 21204 Rev-03
2024-06

General Information

Mallinckrodt™ Pharmaceuticals

INOmax DS IR® Plus

1/ General Information

Part No. 21204 Rev-03
2024-06

1 General Information

1.1 Indications for Use

- The INOmax DS_{IR}® Plus (delivery system) delivers INOMAX® (nitric oxide for inhalation) therapy gas into the inspiratory limb of the patient breathing circuit in a way that provides a constant concentration of nitric oxide (NO), as set by the user, to the patient throughout the inspired breath. It uses a specially designed injector module, which enables tracking of the ventilator waveforms and the delivery of a synchronized and proportional dose of NO. It may be used with ventilators and respiratory care devices that the INOmax DS_{IR} Plus has been validated with.
- The INOmax DS_{IR} Plus provides continuous integrated monitoring of inspired O_2, NO_2, and NO, and a comprehensive alarm system.
- The INOmax DS_{IR} Plus incorporates a battery that provides up to six hours of uninterrupted INOMAX delivery in the absence of an external power source.
- The INOmax DS_{IR} Plus includes a backup NO delivery capability that provides a fixed flow of 250 mL/min of NO which along with user supplied 10 L/min of oxygen provides 20 ppm in the gas flow to a patient's breathing circuit. It may also use the INOblender for backup.
- The INOmax DS_{IR}® Plus must only be used in accordance with the indications, contraindications, warnings and precautions described in the nitric oxide drug packaging inserts and labeling and is indicated for use in term and near-term (> 34weeks gestation) neonates with hypoxic respiratory failure associated with clinical or echocardiographic evidence of pulmonary hypertension. INOmax DS_{IR}® Plus is indicated for a maximum of 14 days of use. The primary targeted clinical setting is the Neonatal Intensive Care Unit (NICU) and secondary targeted clinical setting is the transport of neonates.

1.2 Document Conventions

1.2.1 Text and Graphic Conventions

Table 1-1 Document Conventions

Symbol or Convention	Description
WARNING	Warnings in this document alert the reader about a situation which, if not avoided, could result in death or serious injury. Because of their serious nature, warnings are clearly marked with standard red symbols, the word **WARNING** (boldface, all capitals) and the text of the warning in boldface text. Warnings may include situations that could lead to interruption of NO therapy to the patient.
CAUTION	Cautions in this document precaution the reader with statements of potentially hazardous situations which, if not avoided, may result in minor or moderate injury to the user or patient or damage to the equipment or other property. Cautions are clearly marked with standard orange symbols and the word **CAUTION** (boldface, all capitals).
NOTE	Important information needed to operate the INOmax DS_{IR} Plus successfully.
1. Instructional step	Instructional steps generally appear as numbered lists.
(**3**)	Image callout numbers referenced in narrative appear in Arial Black type, and within parentheses.
Boldface within paragraph	Objects on the INOmax DS_{IR} Plus display screen (button, message, symbol etc.) are displayed in boldface.
Italics	References to other sections of this manual or to other documents are displayed in italics. References to figures and tables are italicized only if they are named in the reference. In the electronic version of this manual *italicized references with blue text* contain hyperlinks.
CP.P.0047	Images are referenced with unique ID numbers and are for internal use only.
	Red and black arrow symbols are used to focus reader attention on an aspect of an image, to signify gas flow, or indicate direction of movement. Teal arrows signify INOMAX flow. Green arrows signify oxygen flow.
Hand-touch image CL.L.023	This image is often used as an overlay on INOmax DS_{IR} Plus screen images. It is used to direct the user to the area of the touch screen to be touched/selected.

1.2.2 Terminology

Table 1-2 Terminology

Term	Definition
% v/v	% volume/volume.
Breathing circuit	Part of ventilator or gas delivery system that connects to the INOmax DS_{IR} Plus.
Gas delivery system	Ventilator or non-invasive breathing device.
Control Wheel	Rotary control used to change and confirm settings.
Cylinder	Aluminum cylindrical container for compressed gas (INOMAX or O_2).
EHR	Electronic Health Record.
FiO_2	Fraction of Inspired Oxygen.
HFOV	High frequency oscillatory ventilation.
INOblender®	Backup to the INOmax DS_{IR} Plus. Allows manual ventilation of the patient, providing uninterrupted delivery of INOMAX. The INOblender is also for short term attended use when the primary delivery device cannot practicably be used.
INOMAX®	Nitric oxide for inhalation. Provided as a gas mixture of INOMAX in an aluminum cylinder at a concentration of 800 ppm. Drug administered by the INOmax DS_{IR} Plus.
INOmax DS_{IR} Plus®	Gas delivery system that dispenses INOMAX in a gas mixture to critical care patients. See *Section 1.1 Indications for Use*, and *Section 1.5 Introduction to the INOmax DS_{IR} Plus System* for more information.
INOmeter®	A time metric device that records the amount of time the INOMAX cylinder valve is open. See *Section 1.5.6 The INOmeter and Infrared (IR) Communication* for more information.
Inactive feature	INOmax DS_{IR} Plus display screen element, such as a button, that is temporarily greyed-out and inoperable.
Infrared ($_{IR,}$ IR)	Infrared technology by which the INOmax DS_{IR} Plus communicates with the INOmeter mounted on each cylinder.
Low Cal	Low Calibration.
MAX	Maximum.
N_2	Nitrogen.
NO	Nitric oxide.
NO_2	Nitrogen dioxide.
O_2	Oxygen.
ppm	Parts per million.
Pre-use circuit	Connectors and tubing assembly required for INOmax DS_{IR} Plus for Pre-Use Checkout.
psig	Pounds per square inch gauge.
Set NO	Dose of INOMAX set by the user.
UDI	Unique Device Identifier.
Water Trap Assembly	Portion of the INOmax DS_{IR} Plus that includes the Water Separator Cartridge, Water Bottle, room-air intake, and the inlet for the Patient Gas Sample Line and Filter.

1.2.3 Symbols Glossary

The following symbols may be found on the labeling and/or packaging of the device and associated accessories. Not every item will have all the symbols.

Table 1-3 Symbols Glossary

Symbol	Symbol Title	Reference Number	Description	Standard Title and Designation Number
SY.L.0051	Alternating current	5032	To indicate on the rating plate that the equipment is suitable for alternating current only; to identify relevant terminals.	IEC/TR 60878 Graphical symbols for electrical equipment in medical practice.
SY.L.0057	Atmospheric pressure limitation	5.3.9	Indicates the range of atmospheric pressure to which the *medical device* can be safely exposed	ISO & ANSI/AAMI/ ISO 15223-1 Medical devices – Symbols to be used with medical device labels – General requirements.
EC REP SY.L.0005	Authorized representative in the European Community/ European Union	5.1.2	Indicates the authorized representative in the European Community/ European Union.	ISO & ANSI/AAMI/ ISO 15223-1 Medical devices – Symbols to be used with medical device labels – General requirements.
LOT SY.L.0013	*Batch code*	5.1.5	Indicates the *manufacturer's batch code* so that the batch or lot can be identified.	ISO & ANSI/AAMI/ ISO 15223-1 Medical devices – Symbols to be used with medical device labels – General requirements.
SY.L.0027	Battery check	5546	To identify a control to check the condition of a primary or secondary battery or to identify the battery condition indicator.	IEC/TR 60878 Graphical symbols for electrical equipment in medical practice.
SY.L.0067	Bell cancel	5576	To identify the control whereby a bell may be switched off or to indicate the operating status of the bell.	IEC/TR 60878 Graphical symbols for electrical equipment in medical practice.
REF SY.L.0033	*Catalogue number*	5.1.6	Indicates the *manufacturer's catalogue number* so that the *medical device* can be identified.	ISO & ANSI/AAMI/ ISO 15223-1 Medical devices – Symbols to be used with medical device labels – General requirements.
SY.L.0070	Caution	5.4.4	Indicates that caution is necessary when operating the device or control close to where the *symbol* is placed, or that the current situation needs operator awareness or operator action in order to avoid undesirable consequences.	ISO & ANSI/AAMI/ ISO 15223-1 Medical devices – Symbols to be used with medical device labels – General requirements.

Symbol	Symbol Title	Reference Number	Description	Standard Title and Designation Number
SY.L.0009	Computer Network	5988	To identify the computer network itself or to indicate the connecting terminal of the computer network.	IEC/TR 60878 Graphical symbols for electrical equipment in medical practice.
0086 SY.L.0041	Conformité Européene (European Conformity)	N/A	CE Marking on a product is a manufacturer's declaration that the product complies with the essential requirements of the relevant European health, safety and environmental protection legislation, in practice by many of the so-called Product Directives.	Directive 93/68/EEC.
SY.L.0194	Consult Instructions for Use	5.4.3	Indicates the need for the user to consult the *instructions for use*.	ISO & ANSI/AAMI/ISO 15223-1 Medical devices – Symbols to be used with medical device labels – General requirements.
PHT DEHP SY.L.0065	Contains or presence of	2725	To indicate that the equipment contains the identified product or substance.	IEC/TR 60878 Graphical symbols for electrical equipment in medical practice.
SY.L.0069	Corrosive	GHS05	Corrosive to skin. Corrosive to metal.	Regulation (EC) No 1272/2008 Classification, labelling and packaging of substances and mixtures.
SY.L.0044	Date of manufacture	5.1.3	Indicates the date when the *medical device* was manufactured.	ISO & ANSI/AAMI/ ISO 15223-1 Medical devices – Symbols to be used with medical device labels – General requirements.
SY.L.0064	*Do not re-use*	5.4.2	Indicates a *medical device* that is intended for one *single use* only.	ISO & ANSI/AAMI/ ISO 15223-1 Medical devices – Symbols to be used with medical device labels – General requirements.
SY.L.0008	Equipotentiality	5021	To identify the terminals which, when connected together, bring the various parts of an equipment or of a system to the same potential, not necessarily being the earth (ground) potential, e.g. for local bonding.	IEC/TR 60878 Graphical symbols for electrical equipment in medical practice.
SY.L.0061	Fragile, handle with care	5.3.1	Indicates a *medical device* that can be broken or damaged if not handled carefully	ISO & ANSI/AAMI/ ISO 15223-1 Medical devices – Symbols to be used with medical device labels – General requirements.

Symbol	Symbol Title	Reference Number	Description	Standard Title and Designation Number
SY.L.0052	Fuse	5016	To identify fuse boxes or their location.	IEC/TR 60878 Graphical symbols for electrical equipment in medical practice.
SY.L.0060	General symbol for recovery/recyclable	1135	To indicate that the marked item or its material is part of a recovery or recycling process.	IEC/TR 60878 Graphical symbols for electrical equipment in medical practice.
SY.L.0058	Humidity limitation	5.3.8	Indicates the range of humidity to which the *medical device* can be safely exposed.	ISO & ANSI/AAMI/ ISO 15223-1 Medical devices – Symbols to be used with medical device labels – General requirements.
SY.L.0053	Input/output (infrared)	5448	To identify a combined input/ output connector or mode.	IEC/TR 60878, Graphical symbols for electrical equipment in medical practice.
SY.L.0019	Input (sample gas or nitric oxide)	5034	To identify an input terminal when it is necessary to distinguish between inputs and outputs.	IEC/TR 60878, Graphical symbols for electrical equipment in medical practice.
SY.L.0012	Keep dry	5.3.4	Indicates a *medical device* that needs to be protected from moisture.	ISO & ANSI/AAMI/ ISO 15223-1 Medical devices – Symbols to be used with medical device labels – General requirements.
SY.L.0045	*Manufacturer*	5.1.1	Indicates the *medical device manufacturer*, as defined in EU Directives 90/385/EEC, 93/42/EEC and 98/79/EC.	ISO & ANSI/AAMI/ ISO 15223-1 Medical devices – Symbols to be used with medical device labels – General requirements.
SY.L.0211	MR Unsafe	7.4.10.1	An item which poses unacceptable risks to the patient, medical staff or other persons within the MR environment.	ASTM F2503-13 Standard Practice for Marking medical devices and other items for safety in the magnetic resonance environment.
SY.L.0039	Non-ionizing electromagnetic radiation	5140	To indicate generally elevated, potentially hazardous, levels of non-ionizing radiation, or to indicate equipment or systems e.g. in the medical electrical area that include RF transmitters or that intentionally apply RF electromagnetic energy for diagnosis or treatment.	IEC/TR 60878 Graphical symbols for electrical equipment in medical practice.
SY.L.0204	No pushing	ISO7010-P017	To prohibit pushing against an object.	IEC/TR 60878, Graphical symbols for electrical equipment in medical practice.

Symbol	Symbol Title	Reference Number	Description	Standard Title and Designation Number
SY.L.0021	On (power)	5007	To indicate connection to the mains, at least for mains switches or their positions, and all those cases where safety is involved.	IEC/TR 60878 Graphical symbols for electrical equipment in medical practice.
SY.L.0020	Output (sample gas and nitric oxide)	5035	To identify an output terminal when it is necessary to distinguish between inputs and outputs.	IEC/TR 60878, Graphical symbols for electrical equipment in medical practice.
℞ ONLY SY.L.0066	Prescription use	N/A	Caution: Federal law restricts this device to sale by or on the order of a physician.	21 CFR 801.109.
SY.L.0059	Protect from heat and radioactive sources	5.3.3	Indicates a *medical device* that needs protection from heat and radioactive sources.	ISO & ANSI/AAMI/ ISO 15223-1 Medical devices – Symbols to be used with medical device labels – General requirements.
SY.L.0049	Refer to instruction manual/booklet	ISO 7010-M002	To signify that the instruction manual/booklet must be read.	IEC/TR 60878 Graphical symbols for electrical equipment in medical practice.
SN SY.L.0031	*Serial number*	5.1.7	Indicates the *manufacturer's serial number* so that a specific *medical device* can be identified.	ISO & ANSI/AAMI/ ISO 15223-1 Medical devices – Symbols to be used with medical device labels – General requirements.
20 Kg. max. SY.L.0068	Stacking limit by mass	0630	On transport packaging. To indicate that stacking possibilities are limited because of the nature of the package.	IEC/TR 60878 Graphical symbols for electrical equipment in medical practice.
3 SY.L.0063	Stacking limit by number	2403	On transport packaging. To indicate that the items shall not be vertically stacked beyond the specified number, either because of the nature of the transport packaging or because of the nature of the items themselves.	IEC/TR 60878, Graphical symbols for electrical equipment in medical practice.
SY.L.0032	Stand-by	5009	To identify the switch or switch position by means of which part of the equipment is switched on in order to bring it into the stand-by condition.	IEC/TR 60878, Graphical symbols for electrical equipment in medical practice.

Symbol	Symbol Title	Reference Number	Description	Standard Title and Designation Number
SY.L.0055	Temperature	0034	To indicate temperature or function associated with temperature (for example, temperature indication, temperature monitoring points).	IEC/TR 60878, Graphical symbols for electrical equipment in medical practice.
SY.L.0054	Temperature limit	5.3.7	Indicates the temperature limits to which the *medical device* can be safely exposed.	ISO & ANSI/AAMI/ ISO 15223-1 Medical devices – Symbols to be used with medical device labels – General requirements.
SY.L.0062	This way up	0623	To indicate correct upright position of the transport package.	IEC/TR 60878 Graphical symbols for electrical equipment in medical practice.
SY.L.0034	Type B applied part	5840	On medical equipment. To identify a type B applied part complying with IEC 60601-1. Note - B = Body.	IEC/TR 60878 Graphical symbols for electrical equipment in medical practice.
SY.L.0056	Use-by-date	5.1.4	Indicates the date after which the *medical device* is not to be used.	ISO & ANSI/AAMI/ ISO 15223-1 Medical devices – Symbols to be used with medical device labels – General requirements.
SY.L.0071	Use No Oil	0248	Use No Oil.	ISO 7000 Graphical symbols for use on equipment – registered symbols. ISO10524-1Pressure regulators for use with medical gases – Part 1: Pressure regulators and pressure regulators with flow-metering devices.
SY.L.0036	Universal serial bus (USB)	N/A	USB icon is used to identify USB plugs and receptacles.	IEC 62680-2-1 Universal Serial Bus interfaces. for data and power Part 2-1: Universal Serial Bus Specification, Revision 2.0 (TA 14).
SY.L.0030	WEEE Waste of Electrical and Electronic Equipment	N/A	Indicates that when end-user wishes to discard this product it must be sent to separate collection facilities for recovery and recycling in the EU.	BS EN 50419: 2006 Marking of Electrical Equipment in accordance with Article 11(2) of Directive 2002/96/EC (WEEE).

1.2.4 Device Icons Lookup

Table 1-4 Device Icons Lookup

Alarms Buttons					
CS.S.0008	Alarm Help	CS.S.0038	Clear Recent Alarms	CS.S.0037	Recent Alarms
AutoClaving					
134˚C	Autoclavable	SYL.L.00X48	Not Autoclavable		
Estimated Dose					
SYL.L.0003	Estimated Dose Greater than 20% Calculated	SYL.L.0004	Estimated Dose Less than 20% Calculated		
Flow Rate					
avg SYL.L.0002	Average Flow Rate	peak SYL.L.0022	Peak Flow Rate		
Gas Ports					
SYL.L.0028	Sample Gas Inlet	SYL.L.0019	NO Inlet	SYL.L.0020	NO Outlet
Guidance Icons					
SYL.L.0016	Injector Module	SYL.L.0025	Purge Location	SYL.L.0037	Water Separator Cartridge
Pneumatic Backup Switch					
SYL.L.0017	NO Pneumatic Backup OFF	SYL.L.0018	NO Pneumatic Backup ON		
Pneumatic Ports					
SYL.L.0023	Pneumatic Inlet	SYL.L.0024	Pneumatic Outlet		

1.3 Conditions for Use

- This Product will perform in conformity with the description contained in this operating manual and accompanying labels and/or inserts, when assembled, operated, maintained and repaired in accordance with the instructions provided.
- This Product must be checked prior to use following the procedure described in *Section 3.2 Automated Pre-Use Checkout*.
- A defective Product should not be used.
- If service is required contact Customer Support (see back cover).
- This Product or any of its parts should not be repaired other than in accordance with written instructions provided by the manufacturer or local distributor.
- The Product must not be altered.
- The user of this Product shall have the sole responsibility for any malfunction which results from improper use, faulty maintenance, improper repair, damage, or alteration by anyone other than the manufacturer.

WARNING

Persons using this device should be trained and experienced in the use of it, to assure effective administration of NO, and to avoid injury to the patient or to others resulting from inhalation of excess NO, nitrogen dioxide or other reaction products. The user of the INOMAX and Nitric Oxide Delivery Systems must complete a comprehensive training program for health care professionals provided by the delivery system and drug manufacturers.

NOTE: A complete list of Warnings in this document is in *Section1.4.1*.

CAUTION

U.S. Federal law restricts this device to sale by or on the order of a physician or other licensed medical practitioner. Outside the U.S.A., check local laws for any restrictions that may apply. Inhaled NO mixtures must be handled and stored in compliance with federal, state and local regulations.

1.4 Before Using the INOmax DS_{IR} Plus

Before using the INOmax DS_{IR} Plus:

- Read and understand the INOMAX package insert and labeling.
- Read and understand this manual, including:
  - The Warning and Caution notices.
  - The troubleshooting information.
  - How to contact Customer Support (see back cover).
- Complete the required training program for health care professionals provided by the manufacturer.

1.4.1 Warnings (Complete List)

The following are warnings which pertain to the general use of the INOmax DS_{IR} Plus.

Changing INOMAX Cylinders

Do not remove or deface INOMAX cylinder labeling.

- **Do not lift an INOMAX cylinder by its valve or valve protection cap or by using a chain, sling, or magnet.**
- **Do not use a hammer, pry, or wedge to loosen a valve or protection cap. The valve and protection cap operate by hand.**
- **Do not use an adapter to connect an INOMAX cylinder to the system.**
- **Do not allow oil, grease or other substances to contact INOmax DS_{IR} Plus gas connections.**
- **Do not repair a leak on an INOMAX cylinder valve or its safety relief device.**
- **Do not operate equipment that is leaking, or ship a leaking INOMAX cylinder.**

Not following these warnings can result in damage to the INOmax DS_{IR} Plus and INOMAX cylinders. Always secure an INOMAX cylinder when it is not in use.

Do not start INOMAX drug delivery if the cylinder pressure is less than 34.5 (500 psig). Replace the INOMAX cylinder if pressure is less than 13.8 bar (200 psig). Using an INOMAX cylinder with low pressure can cause drug delivery to stop should the cylinder become depleted.

Cross Contamination and Patient Health

If an alarm occurs, always safeguard the patient first before performing troubleshooting or repair procedures.

Abrupt discontinuation of INOMAX can lead to worsening oxygenation and increasing pulmonary artery pressure, i.e., Rebound Pulmonary Hypertension Syndrome (refer to the INOMAX package insert). To avoid abrupt discontinuation, use the INOblender as a manual backup or Integrated Pneumatic Backup immediately to reinstate INOMAX therapy.

Equipment Setup and Non-Modification

Persons using this device should be trained and experienced in the use of it, to assure effective administration of NO, and to avoid injury to the patient or to others resulting from inhalation of excess NO, NO_2 or other reaction products. The user of the INOMAX and Nitric Oxide Delivery Systems must complete a comprehensive training program for health care professionals provided by the delivery system and drug manufacturers.

Do not use the INOmax DS_{IR} Plus without first following all steps in the Pre-use Checkout procedure. Using the device without performing this procedure can result in a failure to detect potentially serious device issues.

Devices that radiate high-intensity electrical fields can have an adverse effect on INOmax DS_{IR} Plus operation. Maintain constant surveillance of all monitoring and life support equipment whenever interfering devices are in operation near a patient.

Arrange power cord, Patient Gas Sample Line and Filter, injector tubing and Injector Module cable to avoid entanglement, strangulation and/or a trip hazard.

Position all cables and hoses to help prevent damaging or occluding them.

Do not use the INOmax DS_{IR} Plus unless the INOMAX cylinder and regulator have been purged. Purging the INOMAX cylinder and regulator minimizes NO_2 exposure.

If the INOmax DS_{IR} Plus is not used immediately following setup, and is pressurized for more than 10 minutes, repeat auto-purge procedure.

Do not use equipment that is not specified as part of the system or that is not designed for INOMAX mixtures. Using equipment not specified for the INOmax DS_{IR} Plus can cause the system to malfunction.

Do not modify INOmax DS_{IR} Plus equipment or accessories.

Do not remove the INOmeter. Removing the INOmeter can cause the system to stop delivery. If there is a problem with the INOmeter, contact Customer Support for additional information (see back cover). INOmeter battery replacement is only to be performed by the manufacturer.

Cap the Gas Sample Tee if the Patient Gas Sample Line and Filter is removed from patient breathing circuit. This will help prevent breathing circuit pressure loss.

Only use parts/accessories designated for use with this system.

Infrared and RS232 Communications

Loss of communication between the INOmax DS_{IR} Plus and the INOmeter for more than one hour will interrupt INOMAX delivery. If this occurs, use one of the backup delivery systems.

Do not operate the INOmax DS_{IR} Plus near high frequency and/or high intensity light. High frequency and/or high intensity light emission near the INOmeter can interfere with communication between the INOmax DS_{IR} Plus and the INOmeter on the INOMAX cylinder.

Do not obstruct line of sight communications between the INOmeter and the Cart to which it is attached. This can disrupt communication between the INOmax DS_{IR} Plus and the INOmeter.

This device should only be connected to RS232 ports that have 4 kV input to output isolation, 4kV input to mains isolation, and an internal “reference voltage” “U” as defined in section 8.8.3 table 7 of ANSI/AAMI ES60601-1:2005 (IEC 60601-1:2005, MOD) of less than or equal to 50 VDC or 50 Vpeak and dielectric isolation certified in accordance with ANSI/AAMI ES60601-1:2005 (IEC 60601-1:2005, MOD). Interface cabling must not go outside of the room (e.g., into walls where potential isolation issues could exist).

RS232 cables must be shielded. The RS232 cable shield shall have a minimum of 90% coverage. The shield shall only be connected at one end of the cable to minimize noise induced by ground currents.

Integrated Pneumatic Backup

Do not use the Integrated Pneumatic Backup with the Bunnell Life Pulse ventilator because with low servo pressures, flow rates can be below 2 L/min, resulting in delivered INOMAX doses greater than 80 ppm.

Do not use the Integrated Pneumatic Backup with breathing circuit gas flows less than 5 L/min, as the delivered INOMAX dose will be greater than 40 ppm.

Maintenance of the System

Do not use the INOmax DS_{IR} Plus with broken, missing, or visibly worn, distorted, or contaminated parts.

To help prevent fire, use only lubricants such as KRYTOX approved for use on O_2 equipment.

Do not use lubricants which contain oil or grease, as they burn or explode in high O_2 concentrations.

Do not sterilize or disinfect with the power connected.

Do not attempt to reprocess or re-use single-use devices. This can lead to risk of cross-contamination, compromised functionality and bio-incompatibility.

Dispose of the water bottle contents in accordance with universal precautions for contamination.

Dispose of the water separator cartridge in accordance with universal precautions for contamination.

Do not use the Injector Module unless it is cleaned properly after each use or between patient uses:

- **If the Injector Module was used in the wet/humidified part of the breathing circuit, sterilize it between uses. The inspiratory side of an anesthesia circuit is considered wet/humidified.**

Do not incinerate sensors. Handle and dispose of sensors according to facility biohazard policies.

Sensors contain electrolyte that can be corrosive to skin and metal if leaking occurs.

Purging the Regulator Supply Line or the INOmax DS_{IR} Plus Device

A new INOMAX cylinder and regulator must be purged before use to ensure the patient does not receive greater than 1.0 ppm of NO_2.

If the INOmax DS_{IR} Plus is not going to be used on a patient within 10 minutes, depressurize the regulator supply line.

If the INOmax DS_{IR} Plus is not used and is pressurized for more than 10 minutes, repeat auto-purge procedure.

If the INOmax DS_{IR} Plus is depressurized and not used on a patient within 24 hours, repeat the pre-use procedure.

Do not use the INOblender unless the INOMAX cylinder and regulator have been purged. Purging the pressure regulator, INOblender and hoses minimizes NO_2 exposure.

Transport

Verify that there is enough INOMAX to last through the transport, including unexpected delays. Bring additional INOMAX cylinders as appropriate. Refer to *Appendix B, Duration and Dilution Charts*.

Ensure the battery is fully charged prior to transport. Refer to *Section 4.6 Running on Battery Power.*

If the INOmax DS_{IR} Plus or INOblender is used in a transport vehicle, the INOmax DS_{IR} Plus and INOblender should be securely attached to the transport incubator/ gurney. Secure each device to the Mounting Post, which is part of the Transport Mounting Bracket Assembly, to prevent possible injury.

Never use more than one length of extension hose between the regulator and the INOblender. Using more than one extension hose can result in increased NO_2 production.

The INOblender should be upright when setting the O_2 flowrate for accurate setting.

A backup Transport Regulator/Cap Assembly should be available during all transports. If the primary Transport Regulator/Cap Assembly fails, therapy will be interrupted.

Troubleshooting

Do not interrupt INOMAX delivery while troubleshooting the INOmax DS_{IR} Plus delivery system.

If INOMAX delivery is interrupted, switch the patient to a backup delivery system before proceeding with troubleshooting.

INOMAX delivery has been interrupted.

Replace the delivery system if necessary.

Do not discontinue INOMAX delivery if the high NO_2 alarm activates. Assess the delivery system for proper set up while maintaining INOMAX delivery, and adjust INOMAX and/or FiO_2 as appropriate. Refer to the INOMAX package insert for details on the effects of NO_2. If the cause of increased NO_2 levels cannot be determined, contact Customer Support (see back cover).

Delivery Stopped will occur one hour from point when cylinder alarm is activated.

Delivery Stopped will occur two minutes after the expired cylinder valve is opened.

Delivery Stopped will occur two minutes after the wrong concentration cylinder valve is opened.

In the event of a device power failure or a main alarm speaker failure, a secondary audible alarm provides a continuous buzzing tone that cannot be silenced. Provide backup INOMAX delivery to the patient and contact Customer Support (see back cover).

Do not set upper and lower alarm limits to extreme values. Extreme alarm limit settings can undermine the function of the alarm system.

If battery fails while device is in use, do not unplug AC power.

Use of a Resuscitation Bag

The purge procedure must be followed to help ensure NO_2 is purged from the system before the manual resuscitator bag is connected to the patient.

The manual bag should be squeezed repeatedly during use to avoid NO_2 from building up in the bag.

If the bag is not squeezed repeatedly while delivering INOMAX, the bag should be removed from the patient and the purge procedure performed before continuing.

Squeeze the manual resuscitator to purge NO_2 prior to connecting it to the patient.

Remove manual resuscitator from patient when not in use, to avoid NO_2 accumulation.

Use that is Not Consistent with / Outside of Product Labeling

The INOmax DS_{IR} Plus can only be used with INOMAX. Always use INOMAX, which is pharmaceutical grade NO.

Do not use the INOmax DS_{IR} Plus with helium/O_2 mixtures. The INOmax DS_{IR} Plus delivers INOMAX therapy gas only in conjunction with the delivery of air and O_2.

Do not use the INOmax DS_{IR} Plus for purposes other than those specified in the indications, usage, contraindications, warnings, and cautions in this manual and in the INOMAX package insert and labeling.

Do not use the INOmax DS_{IR} Plus without understanding and following the instructions in this manual and on the INOMAX label.

Use of the INOmax DS_{IR} Plus is limited to the use in accordance with INOMAX (nitric oxide for inhalation) prescribing information as approved with the national health authority. The primary targeted clinical setting is the Intensive Care Unit (ICU) and secondary targeted clinical setting is the transport of patients.

In the United States, the approved patient population for the INOmax DS_{IR} Plus as specified in the drug labeling for INOMAX (nitric oxide for inhalation) is limited to term and near-term (> 34 weeks gestation) neonates with hypoxic respiratory failure. The INOmax DS_{IR} Plus is not intended to be used in other patient populations.

Outside of the United States, use of the INOmax DS_{IR} Plus is limited to the use in accordance with INOMAX or INOflo (nitric oxide for inhalation) prescribing information as established with the national health authority.

Ventilators and Breathing Devices

The INOmax DS_{IR} Plus subtracts gas from the breathing circuit via the gas sampling system at a rate of 230 mL per minute. This can adversely affect the sensitivity of a flow-triggered synchronized breath mode of some gas delivery systems. Always check the trigger sensitivity of the gas delivery system after connecting the INOmax DS_{IR} Plus to the breathing circuit.

Do not use the INOmax DS_{IR} Plus with a BiPap system or other single-lumen breathing systems with bidirectional flow. Using the INOmax DS_{IR} Plus with these systems can result in an INOMAX over-delivery or interruption in INOMAX delivery.

The INOmax DS_{IR} Plus is designed to function within specifications listed in *Chapter 8 Product Specifications.* **Do not use the INOmax DS_{IR} Plus outside the specified ranges.**

Do not use pneumatically powered nebulizers with the INOblender. This will result in additional back-pressure generated by pneumatic nebulizers, which will cause inaccurate delivery of the INOMAX dose.

Do not use pneumatically powered nebulizers with the INOblender. This will result in significant over delivery of INOMAX in excess of 80 ppm.

- **The INOblender outlet pressure has been validated for use up to 400 millibar (5.8 psig) pressure. The amount of back-pressure generated by pneumatic nebulizers is significantly greater [1.4 - 2.0 bar (20-30 psig)] and will result in over delivery of INOMAX in excess of 80 ppm with an 800 ppm cylinder. The user adjusted dose setting on the INOblender will not correlate with, or have an effect on, the actual delivered dose.**
- **In addition, the INOblender flowmeter is not back-pressure compensated and will display a lower than actual flow rate when pressure is applied to the outlet.**

Avoid recirculation of gases, which occurs if fresh gas flows are less than the patient minute volume. Recirculation of gases can result in:

- **Higher NO_2 levels, due to the limited ability of the carbon dioxide absorbent to remove NO_2.**
- **Higher than set NO concentration, due to NO recirculated through the absorber.**
- **Reduction in O_2 concentration, because nitrogen is the balance gas for NO and will be present in the re-circulated gases.**

Always maintain fresh gas flow greater than the patient's minute volume.

Do not use the Integrated Pneumatic Backup (250 mL/min) with the Bunnell Life Pulse ventilator because with low servo pressures, flow rates can be below 2 Lpm, resulting in doses greater than 80 ppm.

Ventilator Circuits with High Frequency Oscillatory and Jet Features

Do not suction the patient without first placing the Bunnell Life Pulse ventilator in Standby. Otherwise the system will over-deliver NO during this time period by as much as 30 ppm.

Immediately upon removing the suctioning catheter, press the Enter button on the Bunnell Life Pulse ventilator to reestablish ventilation. This will limit the extent of over-delivery.

Do not use the Integrated Pneumatic Backup with the Bunnell Life Pulse ventilator because with low servo pressures, flow rates can be below 2 L/min, resulting in delivered INOMAX doses greater than 80 ppm.

Do not omit the one-way valve when using the Sensormedics 3100A/B; the Drager Babylog VN500 or the Infinity Acute Care system in high frequency mode. This can result in high NO delivery outside of product specifications.

A one-way valve is required between the Injector Module and the tee into the inspiratory limb of the breathing circuit to prevent high NO delivery when using the Fabian HFOi ventilator in the high frequency mode.

Do not use a one-way valve as this will interrupt the pressure safety release of the Humming HMX and is not allowed by the ventilator manufacturer.

Do not use dose settings above 40 ppm. Bidirectional flow through the Injector Module may cause measured NO values greater than 100 ppm (when using the Fabian HFO Ventilator in High Frequency Mode).

1.4.2 Environmental Considerations

The National Institute for Occupational Safety and Health (NIOSH)[1] has recommended exposure limits as follows.

Table 1-5 Exposure Limits

NO	time-weighted (8 hours) average concentration limit of 25 ppm
NO_2	ceiling limit of 1 ppm

The environmental build-up of NO in a well ventilated ICU room can be evaluated using the following calculation.

Room size	1000 ft^3
Room volume	28,300 L
Room ventilation (6 complete exchanges/hour)	28,300 L/min
NO flow into the room	80 ppm at 14 L/min
Average NO room concentration (80 x14) ÷ 2,830 (80 x14) ÷ 2,830 = 0.396 ppm (0.4 ppm)	0.4 ppm of NO

This theoretic calculation can be supplemented by measurements as performed by Hess et al (Ref. 2). The NO and NO_2 concentrations were measured using a chemiluminescence analyzer when 100 ppm of NO at 8 L/min was delivered into a room with no scavenging being used The maximum NO and NO_2 concentrations measured over a one hour period were 0.12 ppm of NO and 0.03 ppm of NO_2.

If your location for using NO has uncertain ventilation then it should be evaluated for NO and NO_2 build-up prior to use (*see* *Section 3.4.2 Monitoring the Environment*).

1 Centers for Disease Control, Atlanta, GA 30333 USA. NIOSH Recommendations for Occupational Safety and Health Standards 1988. August 26, 1988 / vol. 37 / No. 9.

1.4.3 Effect of the INOmax DS_{IR} Plus in a Gas Delivery System Circuit

There are two main effects of connecting and using the INOmax DS_{IR} Plus in a gas delivery system breathing circuit.

- The INOmax DS_{IR} Plus adds INOMAX to the gas delivery system in proportion to the set dose and the cylinder concentration. For example, a 20 ppm dose (20 ppm/800 ppm= 2.5%) will add 2.5% to the gas delivery system.
- The gas sampling system removes gas at a rate of 0.23 L/min.

Oxygen Dilution: INOMAX also dilutes the O_2 as described above. At an INOMAX dose setting of 20 ppm, the added gas is 2.5%. Thus, the O_2 concentration is reduced by 2.5%. For example, if the original O_2 concentration was 60% v/v, then the O_2 value after injection, at the maximum setting is 57.5% v/v. For example see table below.

Table 1-6 Oxygen Dilution Table

Set Dose (ppm) 800 ppm Cylinder	Oxygen Dilution % v/v
80	10
40	5
20	2.5

Minute Volume: Minor gas delivery system adjustments may be required due to the addition and removal of gases by the delivery system. The net result can be calculated as follows:

- If the patient's minute ventilation is 10 L/min the additional minute volume due to the INOMAX can be calculated as follows:

$$\frac{\text{INOMAX Dose X Minute Volume}}{\text{Cylinder Concentration} - \text{INOMAX Dose}} = \text{Additional INOMAX Volume Added per Minute}$$

For example, for a dose of 20 ppm the additional volume would be ((20 X 10) / (800 – 20)) = 0.26 L/min.

- To calculate the net change in minute volume:

$$\text{Volume of INOMAX added} - \text{The Volume Removed} = \text{Net Change in Minute Volume}$$

For example, 0.26 L/min INOMAX added - 0.23 L/min removed (sample system) = 0.03 L/min (net change).

Ventilator flow triggering sensitivity settings should be evaluated and adjusted as needed.

1.5 Introduction to the INOmax DS_{IR} Plus System

The INOmax DS_{IR} Plus system is for INOMAX (nitric oxide for inhalation) administration and treatment monitoring. It is a system comprised of the main delivery device (INOmax DS_{IR} Plus), a pneumatic INOblender for backup use, and a Cart which holds the main device and INOblender, as well as INOMAX drug cylinders, regulators, oxygen cylinder and miscellaneous parts.

The INOmax DS_{IR} Plus system is primarily for bedside hospital use, but can be configured for medical transport. It interfaces with many types of gas delivery systems (see *Section 3.3.5 Connecting to Gas Delivery Systems*).

Figure 1-1 shows how the INOmax DS_{IR} Plus might be situated at a hospital bedside. See *Section 1.6.1 INOmax DS_{IR} Plus Operational Flow* for a technical explanation of the system.

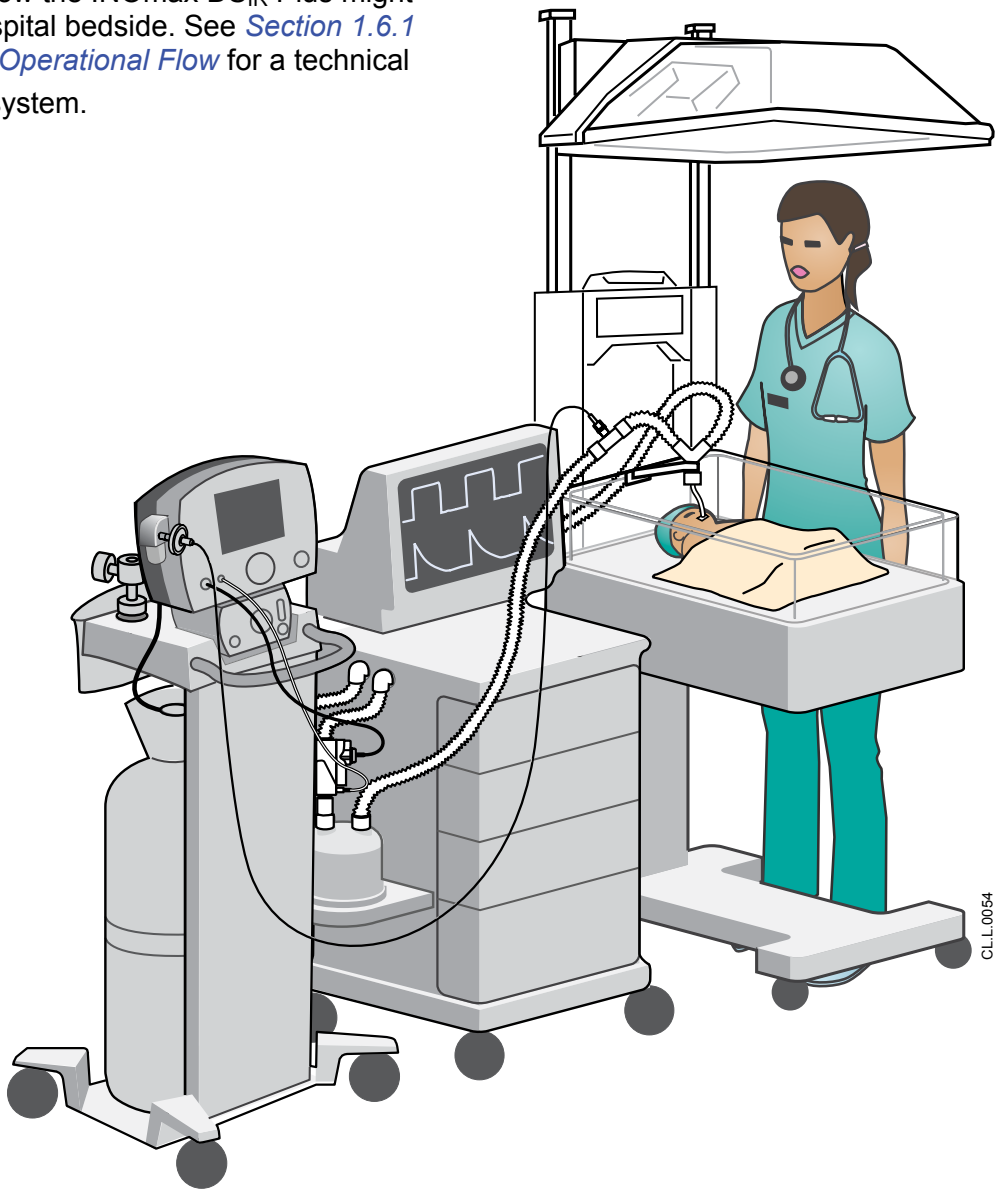

Figure 1-1 Illustration of an INOmax DS_{IR} Plus system setup in a hospital neonatal intensive care area

1.5.1 Overview of Main Components

This section introduces the user to the device and other core components of the INOmax DS_{IR} Plus system. Figure 1-2 shows a typical configuration assembled on an INOmax DS_{IR} Cart.

- The INOmax DS_{IR} Plus (**1**) is the primary device. It manages the INOMAX delivery and monitors gases with O_2, NO and NO_2 sensors. It also provides the interface to control the system.
- The INOblender (**2**) serves as a pneumatic backup to the INOmax DS_{IR} Plus. It allows manual ventilation of the patient, providing uninterrupted delivery of INOMAX.
- The INOMAX cylinders (**3**) contain drug stored as a gas mixture of NO/N_2 at a concentration of 800 ppm.
- The INOmax DS_{IR} Cart (**4**) holds all the components and organizes them. It allows for moving the system from one location to another, and for securing it in position.

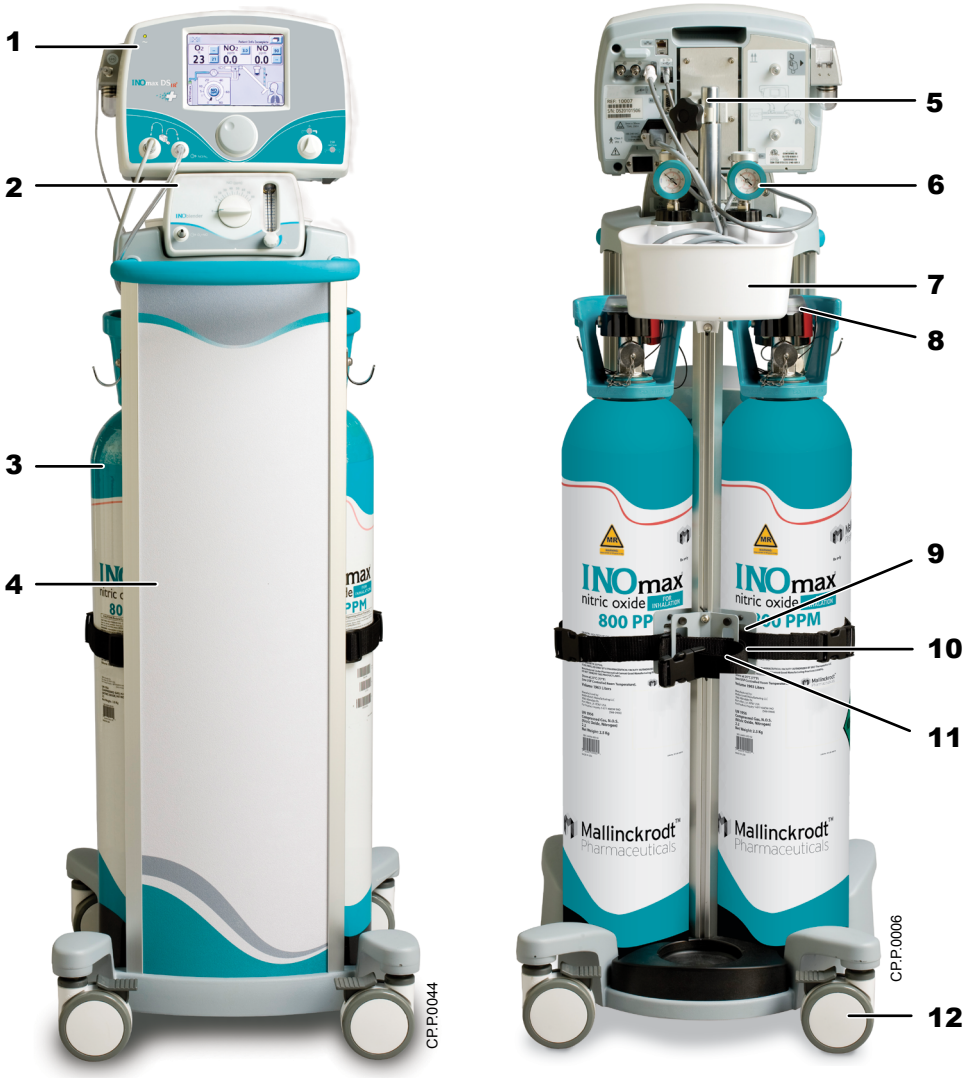

1. INOmax DS_{IR} Plus
2. INOblender
3. INOMAX Cylinders
4. INOmax DS_{IR} Cart
5. DS_{IR} Mounting Post
6. INOMAX Regulators
7. Small Parts Bin
8. INOmeter
9. Cylinder Holding Bracket
10. Cylinder Mounting Strap
11. Oxygen Cylinder Bracket
12. Casters

Figure 1-2 INOmax DS_{IR} Plus system front view (left) and rear view (right)

1.5.2 The INOmax DS_{IR} Plus

The primary unit is the INOmax DS_{IR} Plus (Figure 1-3). It includes the interface for setting up and administering treatment. Most user interactions with the device are accomplished through the touch-sensitive Display Screen (3), and the Control Wheel (6). It contains many other parts including electrical and gas hose inputs, sensors, filters and an ON/OFF switch for Integrated Pneumatic Backup (5).

NOTE: The user is strongly encouraged to become familiar with the parts and components of the INOmax DS_{IR} Plus system to clearly understand how to operate and maintain it.

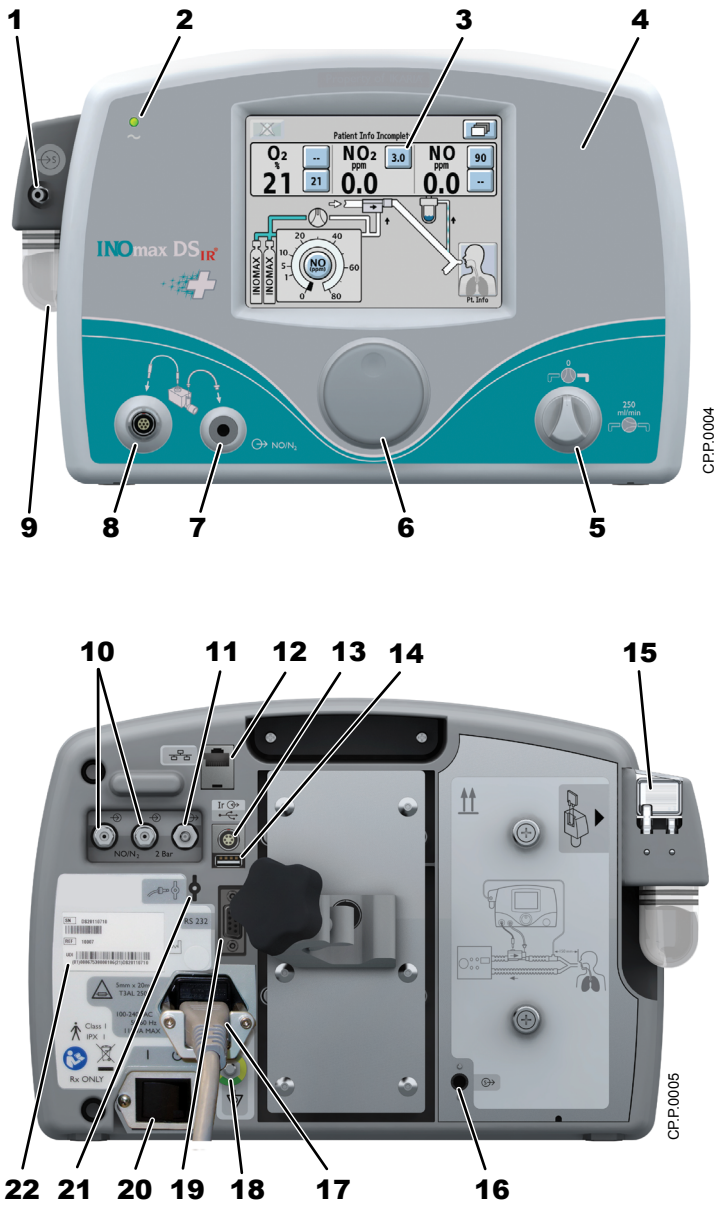

1. Sample Line Inlet
2. Mains Power Indicator
3. Display Screen
4. Alarm Speaker (under front label)
5. Pneumatic Backup Switch
6. Control Wheel
7. Injector Module Tubing Outlet
8. Injector Module Cable Inlet
9. Water Bottle
10. INOMAX Gas Inlets
11. INOblender Gas Outlet
12. Ethernet Port (for service only)
13. Infrared Connector
14. USB Port (for service only)
15. Water Separator Cartridge
16. Sample Gas Outlet Port
17. Electrical Cord Secured with Retaining Bracket
18. Equipotential Terminal
19. RS232 Port
20. ON/Standby Switch
21. Purge Port
22. SN and UDI Label

Figure 1-3 INOmax DS_{IR} device

1.5.3 The INOblender

The INOblender should only be used for manual resuscitation of patients. Use the smallest manual resuscitation bag adequate to deliver the desired tidal volume to minimize the delivered concentration of NO_2

NOTE: The INOblender is a separate device from the INOmax DS_{IR} Plus.

The INOblender serves as a pneumatic backup to the INOmax DS_{IR} Plus. It allows manual ventilation of the patient, providing uninterrupted INOMAX delivery.

Typically, the cylinder supplies INOMAX through the INOmax DS_{IR} Plus, and then through the INOblender. The INOblender can also be used independently by connecting directly to the INOMAX regulator and cylinder.

Before using the INOblender, read the *INOblender Operation and Maintenance Manual*. Follow instructions and obey all Warnings and Cautions.

1. Clamp
2. Dose Setting Dial
3. Oxygen Flowmeter
4. Oxygen Flowmeter Knob
5. INOMAX and Oxygen Outlet
6. Clamp Handle
7. INOMAX Inlet
8. INOblender Inlet Hose
9. Quick-Connect Cover
10. Oxygen DISS Inlet Connection

Figure 1-4 Front view of INOblender

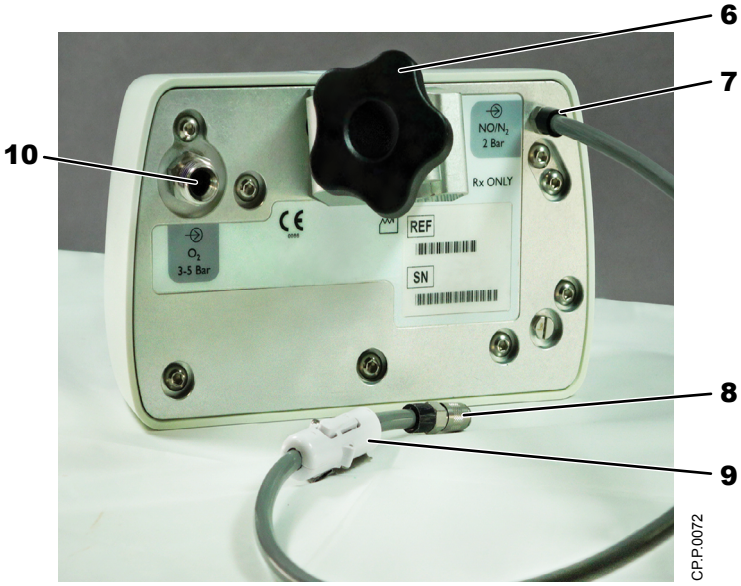

Figure 1-5 Back view of INOblender

1.5.4 INOMAX Cylinders

INOMAX is a drug administered to a patient through a gas delivery system. NO is the active substance in INOMAX. It is a gaseous blend of NO and N_2 (0.08% and 99.92%, respectively for 800 ppm).

INOMAX is supplied in aluminum cylinders as a compressed gas under high pressure, 128 bar (1,850 psig). Cylinders are available in two sizes, “D” and “88” (Figure 1-6).

The INOmax DS_{IR} Plus recognizes the drug as expired on the last day of the month listed on the INOMAX cylinder label.*

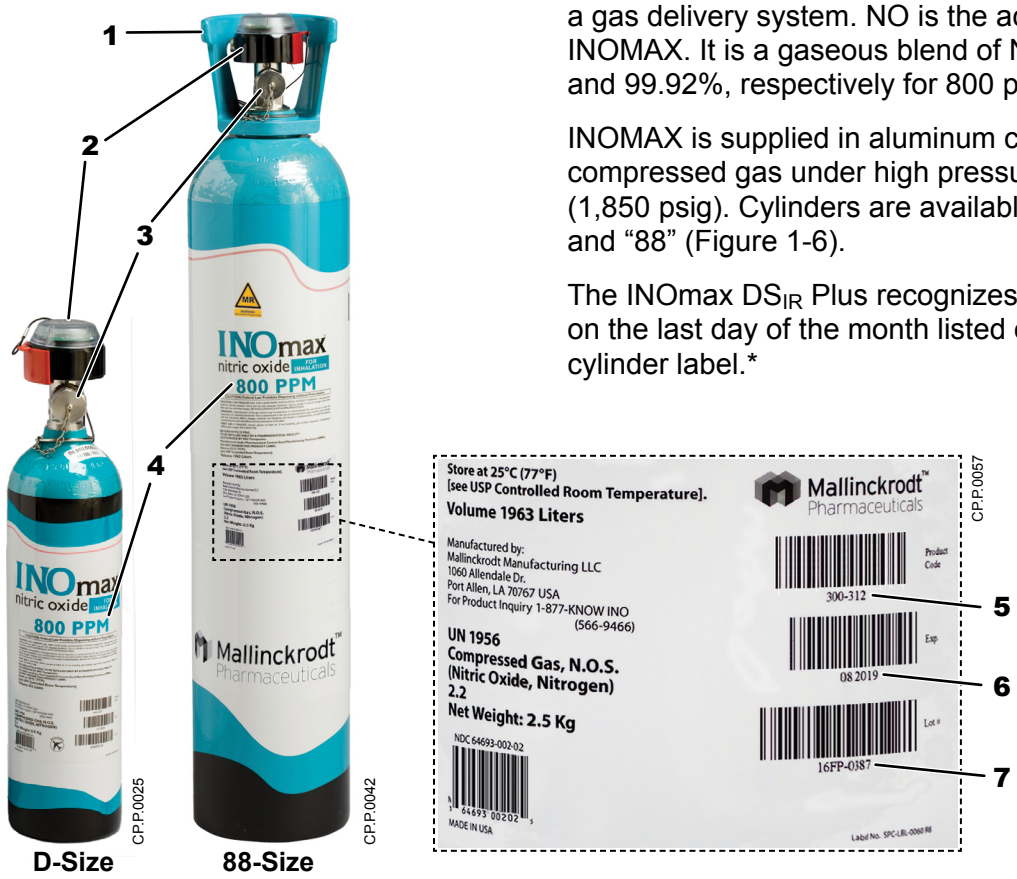

Figure 1-6 INOMAX cylinders

1. Valve Protection Carry Handle (VPCH)
2. INOmeter
3. Cylinder Valve Outlet and Cap
4. INOMAX Concentration
5. Product Code
6. Expiration Date
7. Lot Number

* Between midnight on the last day of the month and midnight the following day, depending on time zone.

1.5.5 The INOmax DS_{IR} Cart

The INOmax DS_{IR} Cart carries all the components, and organizes them for use. Figure 1-7 displays the Cart without the Cylinders, INOmax DS_{IR} Plus and INOblender removed.

1. Cart Handle
2. Small Parts Bin
3. Literature Pocket
4. Cylinder Bays
5. Cylinder Mounting Straps
6. O_2 Cylinder Bracket
7. INOMAX Cylinder Recesses
8. O_2 Cylinder Recess

Figure 1-7 Rear view of unloaded INOmax DS_{IR} Cart

The Cart has a low center of gravity and wide wheel base. It is stable and easily moved. To move it, release the caster locks, grip the Cart Handle (Figure 1-8) and push or pull the Cart.

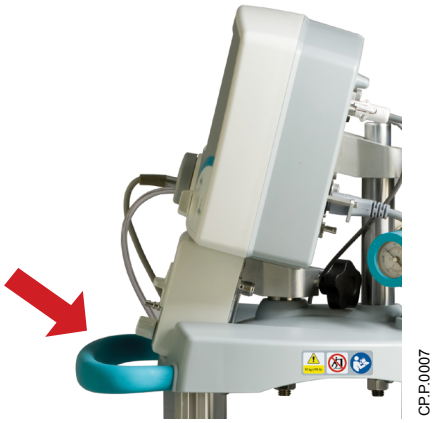

Figure 1-8 Side view of Cart, showing handle

The caster-locks should be used to anchor the Cart in position. Step on the tread portion of a caster-lock (Figure 1-9, left) to lock it in place. Step on the non-tread portion (Figure 1-9, right) to release it.

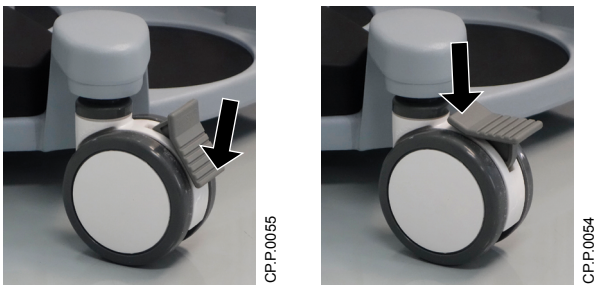

Figure 1-9 Caster locked (left) and unlocked (right)

CAUTION

Do not lean on the INOmax DS_{IR} Cart, or lean objects against it. Do not use it for anything other than the stated purpose.

The Cart Cover includes two wells for regulator storage. They are located at the back of the cover next to the Small Parts bin (see Figure 1-10).

Figure 1-10 Placing a regulator in one of the regulator storage wells

1.5.5.1 Mounting the INOblender and INOmax DS_{IR} Plus

The INOmax DS_{IR} Cart has two steel mounting posts that protrude upward from the Cart Cover. The short post towards the front, is for securing the INOblender. The INOblender must be mounted first, before the The INOmax DS_{IR} Plus can be attached.

Figure 1-11 shows an INOblender (**1**) in-place, with the top of the post (**2**) showing within the assembly clamp (**3**). To secure the INOblender to the Cart, tighten the clamp by turning the handle (**4**) clockwise.

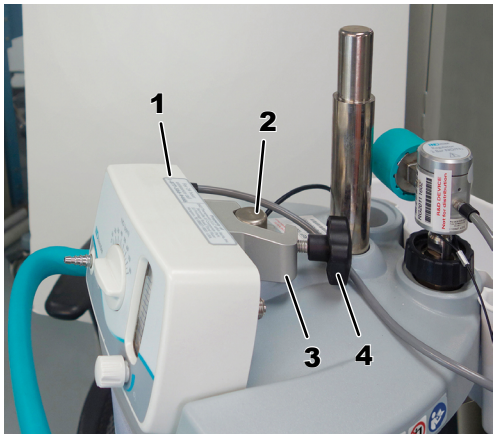

Figure 1-11 Installing an INOblender on the Cart

After securing the INOblender, the INOmax DS_{IR} Plus can be placed on the Cart (Figure 1-12). This is done by sliding the DS_{IR} Assembly Clamp (**1**) over the remaining (taller) mounting post (**2**).

Unlike the INOblender, the INOmax DS_{IR} Plus can be swiveled a few degrees to the right or left, to position it for better viewing. Once in the desired position, it should be secured to the post by turning the clamp handle (**3**) clockwise.

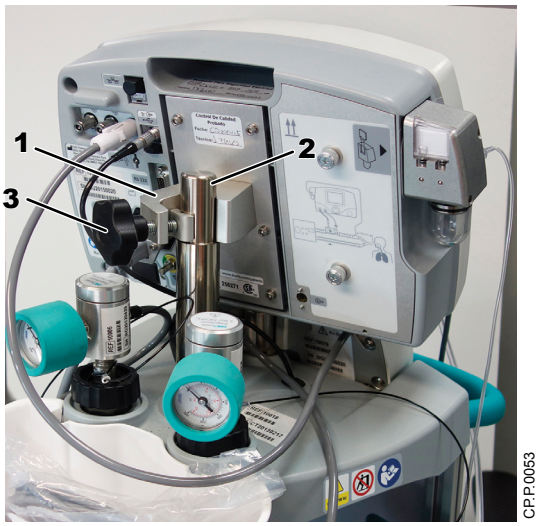

Figure 1-12 Installing a DS_{IR} on the Cart

1.5.6 The INOmeter and Infrared (IR) Communications

The INOmeter is a time-metric device, which records the amount of time the INOMAX cylinder valve is opened. Infrared (IR) communication allows INOMAX cylinder data to be communicated to the INOmax DS_{IR} Plus so it can perform drug identification and expiration date checks, confirming the cylinder is correct. Patient ID (when confirmed) and dose information are also communicated from the INOmax DS_{IR} Plus to the INOmeter.

WARNINGS

Loss of communication between the INOmax DS_{IR} Plus and the INOmeter for more than one hour will interrupt INOMAX delivery. If this occurs, use one of the backup delivery systems.

Do not operate the INOmax DS_{IR} Plus near high frequency and/or high intensity light. High frequency and/or high intensity light emission near the INOmeter can interfere with communication between the INOmax DS_{IR} Plus and the INOmeter on the INOMAX cylinder.

Do not obstruct line of sight communications between the INOmeter and the Cart to which it is attached. This can disrupt communication between the INOmax DS_{IR} Plus and the INOmeter.

The INOmax DS_{IR} Cart cover contains infrared transceivers mounted (see **1**, Figure 1-13) directly above each INOMAX cylinder. The INOmax DS_{IR} Plus uses infrared technology to communicate with the INOmeters (**2**) mounted on the cylinders.

- When the INOmax DS_{IR} Plus is turned on and INOMAX cylinders are loaded onto the Cart, the transceiver transmits a beam via a 30 degree transmission cone projecting toward the floor.

  The IR beam has a range of 20 cm (7.9 in). The beam should not affect other devices near the INOmax DS_{IR} Plus.
- When communication is complete, a cylinder icon appears on the screen.

The INOmax DS_{IR} Plus and INOmeter communicate to check that:

- INOMAX cylinder concentration is 800 ppm.
- The expiration date is not passed.

If loss of communication between the INOmax DS_{IR} Plus and the INOmeter occurs refer to the instructions on the next page.

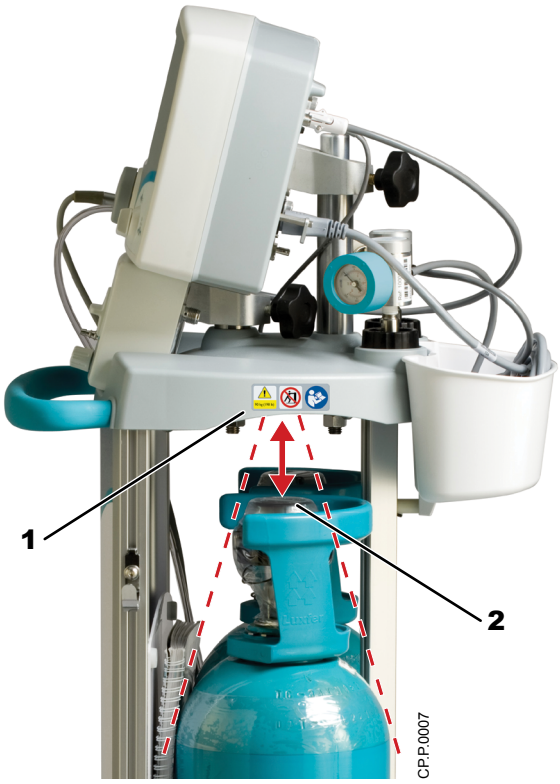

Figure 1-13 Infrared communication

Avoiding Infrared Interference

Because the IR communication between the INOmeter and the INOmax DS_{IR} Plus is important to INOMAX delivery, take care that nothing is placed above or near the INOmeter which could block the IR signal. If IR communication interference occurs, take the following steps:

1. Ensure nothing is physically blocking the INOmeter line of sight.
2. If there appears to be interference from a high intensity light source:
   - Move the light source or move the INOmax DS_{IR} Cart to reduce the light.
   - Shield the INOmeter.

NOTE: The INOmeter does not transmit IR signals unless it is mounted on the INOmax DS_{IR} Cart.

1.5.7 The Injector Module

CAUTION

Breathing circuit latching sockets may not fully engage the injector module (PN 90849) outlet, when connecting to the outside taper.

The Injector Module (Figure 1-14) is a flow sensor that measures flow in the gas delivery system and injects a proportional amount of INOMAX into the breathing circuit.

The Injector Module connects prior to the humidifier chamber on the dry side of the breathing circuit. For detailed information, refer to *Section 2.6 Connecting the Injector Module*.

- A hot film flow sensor measures the gas delivery system flow rate and sends this information to the INOmax DS_{IR} Plus.
- Based on the gas delivery system flow, the INOMAX cylinder concentration, and the set dose of INOMAX, the INOmax DS_{IR} Plus calculates a proportional volume of high concentration INOMAX.
- High concentration INOMAX passes through the NO/N2 Injector Tube (see **1**, Figure 1-14) into the Injector Module, and is injected into the inspiratory limb of the gas delivery system circuit. It then mixes with breathing circuit gas and is diluted to the desired dose.

NOTE: The external dimensions of injector module PN 90849, complies with ISO Standard 5356-1, Anaesthetic and respiratory equipment; Conical connectors; Part 1: Cones and sockets, with the exception of clause 3.2.1, which requires relief of ≥ 6 mm on connection tapers to accommodate a breathing tube equipped with a latching socket. Figure 1-14 (top view) shows where the exception is located on injector module 90849.

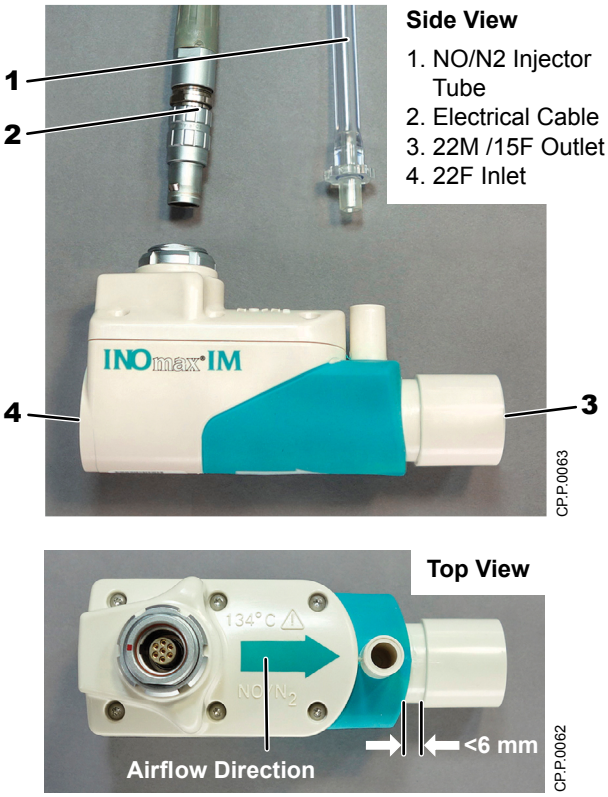

Figure 1-14 Injector Module

1.6 INOmax DS_{IR} Plus Operation

This section describes INOmax DS_{IR} Plus theory of operation and Integrated Pneumatic Backup.

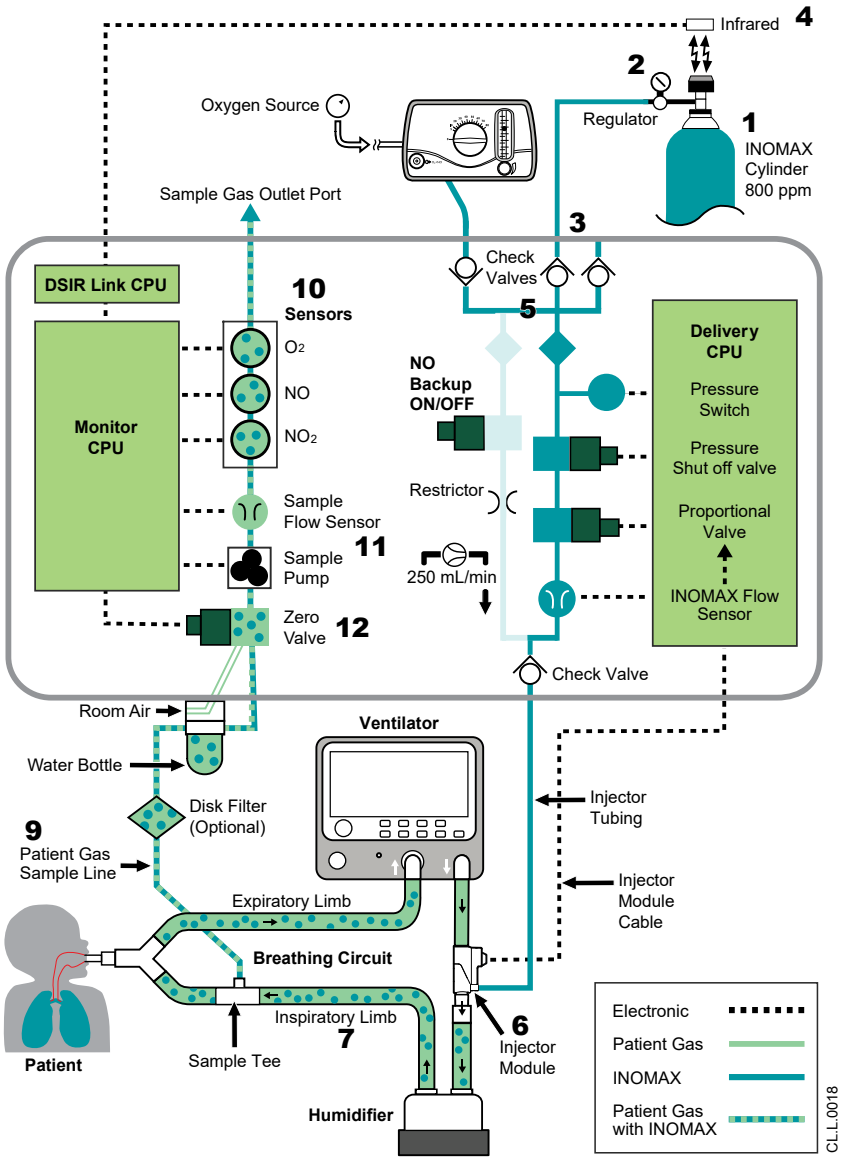

Figure 1-15 Operational flow of the INOmax DS_{IR} Plus

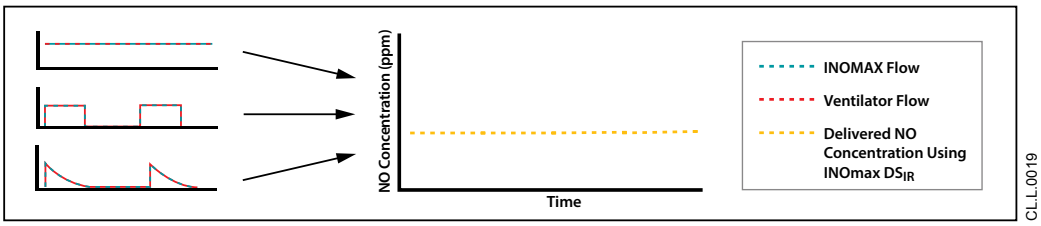

Figure 1-16 INOMAX injection method provides constant NO concentration

1.6.1 INOmax DS_{IR} Plus Operational Flow

The INOmax DS_{IR} Plus provides a constant dose of INOMAX into the inspiratory limb of the gas delivery system circuit. The INOmax DS_{IR} Plus uses a dual channel design to ensure the safe delivery of INOMAX:

- The first channel includes the delivery CPU, the flow controller and the Injector Module to ensure accurate delivery of INOMAX.
- The second channel is the monitoring system. It includes a separate monitoring CPU, the NO, NO_2, and O_2 sensors, and the user interface, including the display and alarms.

The dual channel approach to delivery and monitoring permits INOMAX delivery independent of monitoring. Refer to Figure 1-15 which illustrates the following operational flow:

- INOMAX delivery starts at the INOMAX cylinder (**1**, Figure 1-15). A high pressure regulator (**2**) is attached to the INOMAX cylinder and an INOMAX regulator hose connects to one of the INOMAX gas inlets (**3**) (also see Figure 1-3).
- Using infrared technology (**4**), the INOmax DS_{IR} Plus reads the product identity, INOMAX cylinder concentration and expiration date from the INOmeter on the INOMAX cylinder.
- INOMAX enters the back of the INOmax DS_{IR} Plus and passes through a filter and a safety shutoff valve (**5**). The safety valve remains open during normal operation.
- An Injector Module (**6**) is placed in the gas delivery system circuit between inspiratory outlet and the humidifier. The Injector Module's hot film flow sensor measures the gas delivery system flow rate. The INOmax DS_{IR} Plus receives this information, and based on the measured flow, the INOMAX cylinder concentration, and the set dose of INOMAX, calculates a proportional volume of high concentration INOMAX to be delivered into the gas delivery system circuit via the Injector Module.
- This high concentration of INOMAX passes through the Injector Module tubing into the Injector Module, which injects it into the inspiratory limb of the gas delivery system circuit (**7**). The gas delivery system flow dilutes the high concentration INOMAX to achieve the set dose in a proportional volume.
- An internal flow sensor (**8**) in the INOmax DS_{IR} Plus monitors NO flow out of the device. A check valve, placed prior to the INOmax DS_{IR} Plus drug outlet, prevents pressure effects of a gas delivery system breathing circuit from interfering with the NO flow sensor reading. The INOmax DS_{IR} Plus continually adjusts the volume of INOMAX injected to the circuit, delivering a constant dose of INOMAX to the patient independent of breath rates and varying inspiratory flow rates.
- The gas monitoring system measures inspired NO, NO_2, and O_2. The gas monitoring sensors are electrochemical and, as such, they are specific to each gas and provide an electronic signal proportional to the concentration of the gas present.
    - Using the Patient Gas Sample Line and Filter, the system draws 230 milliliters per minute of gas from the gas delivery system circuit. (**9**)
    - The gas passes through the Water Trap Assembly, past the monitoring sensors (**10**) where it is analyzed; the resulting values display on the monitor.
    - A sample pump and sample flow sensor maintain sample gas flow rate to the monitoring sensors. (**11**)
    - A zero valve allows the gas sensors to be zeroed during Low Calibration, while the Sample Line is connected to the breathing circuit (**12**).

1.6.1.1 Maximum NO Delivery

The INOmax DS_{IR} Plus is limited to a maximum NO flow of 6.35 L/min. This means that the maximum deliverable NO dose varies, based on the gas delivery system flow rate (Figure 1-17). The maximum deliverable NO dose can vary from 80 ppm at a constant flow of approximately 60 L/min to 40 ppm at constant flow approximately 120 L/min.

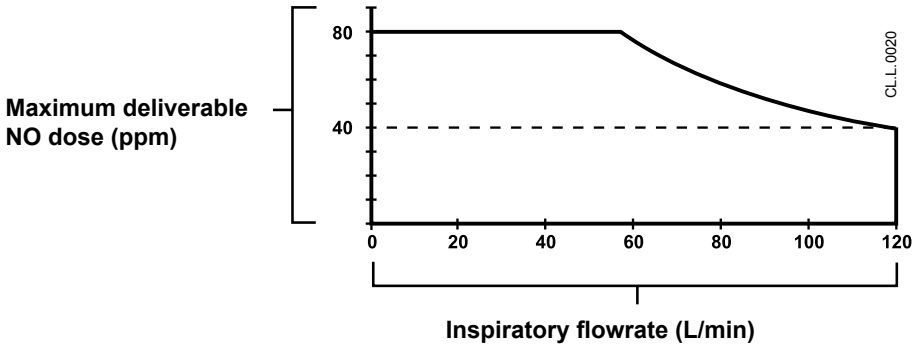

Figure 1-17 Maximum NO dose variability

1.6.2 Integrated Pneumatic Backup

WARNINGS

Do not use the Integrated Pneumatic Backup with the Bunnell Life Pulse ventilator because with low servo pressures, flow rates can be below 2 L/min, resulting in delivered INOMAX doses greater than 80 ppm.

Do not use the Integrated Pneumatic Backup with breathing circuit gas flows less than 5 L/min, as the delivered INOMAX dose will be greater than 40 ppm.

Integrated Pneumatic Backup is intended for short-term use when the electronic delivery system fails until a replacement INOMAX delivery device can be used. This pneumatic backup mode delivers a constant or variable concentration of NO to the patient depending on the gas delivery system flow being used (Figure 1-18). It allows INOMAX therapy to be continued without removing the patient from the gas delivery system. This may result in NO delivery that is different from the set dose on the main delivery system.

If a constant NO concentration is required, it can be delivered by using the INOblender with an emergency resuscitation bag.

- Integrated Pneumatic Backup provides a fixed flow of 250 mL/min of INOMAX directly into the gas delivery system circuit through the Injector Module.
- It provides a method to deliver INOMAX independent of the electronic delivery system.

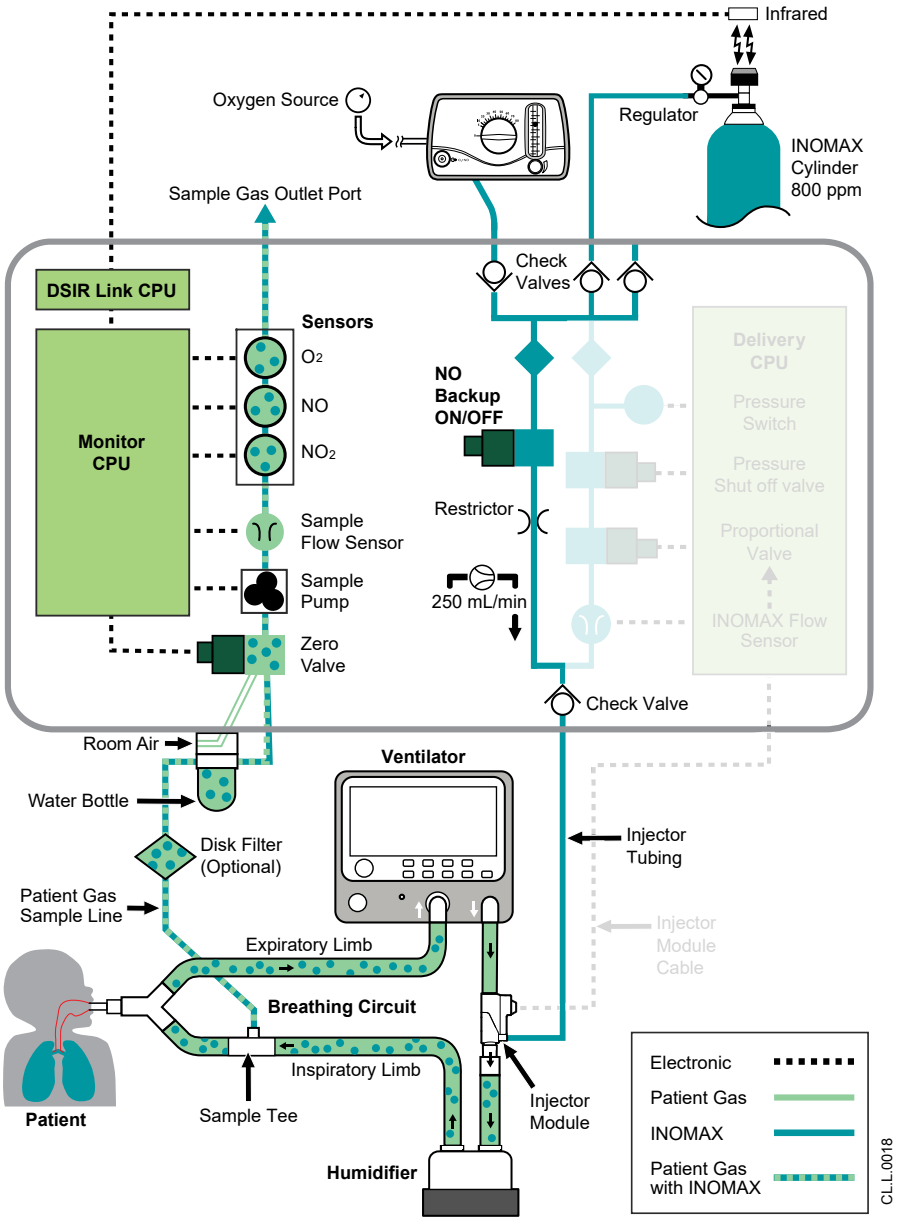

Figure 1-18 Integrated Pneumatic Backup operation (compare with Figure 1-15)

1.7 The INOmax DS_{IR} Plus Interface

The INOmax DS_{IR} Plus uses a **color touch screen display** and a **Control Wheel** for entering and adjusting settings. Generally the sequence for interacting with the INOmax DS_{IR} Plus involves three steps:

1. Select a screen button by touching it.
2. Rotate the **Control Wheel** (see Figure 1-19, right) to the preferred setting.
3. Confirm the setting by pushing the **Control Wheel**, or by selecting the active button again.

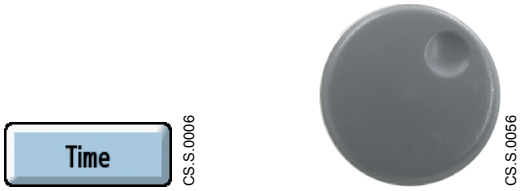

Figure 1-19 Example interface button (left); the Control Wheel (right)

NOTES:

- To cancel an operation after a button has been selected, select the **Cancel Active Status button** [⊠]. The screen will return to the previous state.
- If a button is selected, but no additional input is received, after 5 seconds an audible tone (buzz) sounds, and the button unselects.
- If a setting is changed but not confirmed (see Step 3 above) after 20 seconds an audible tone sounds and the display returns to the previous setting.
- Make sure that the INOmax DS_{IR} Plus screen is unobstructed and that the speaker area is not covered (see Figure 1-20).
- If a button is greyed-out, it is not active or accessible during the current state (see Figure 1-21).

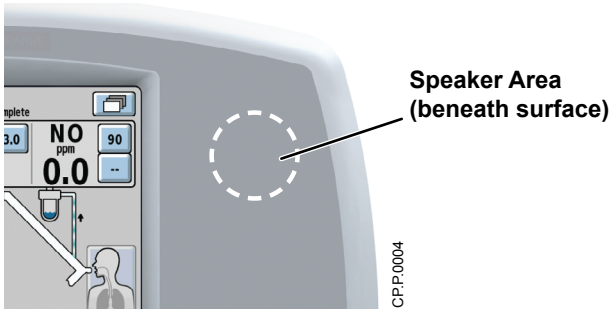

Figure 1-20 Top-right area of the DS_{IR}

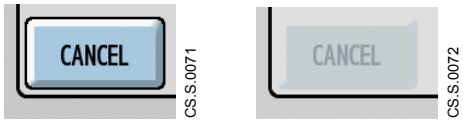

Figure 1-21 Two modes of one button: Active (left) and inactive (right)

1.7.1 The Main Screen

The **Main screen** (Figure 1-22) has three areas:

The top area of screen (**6**) contains the **Alarm Silence Button, Text Message Area**, and the **MENU screen button**.

The middle area of the screen (**7**) displays O_2, NO_2 and NO monitored values, as well as user-adjustable **Alarm Limit Buttons**.

The lower area of the screen (**8**) displays a graphical area showing the status of the INOMAX cylinders, dose setting, gas paths, and highlights active alarms.

The **INOMAX cylinder icons** represent the actual cylinders on the Cart, in their respective positions as you are facing the INOmax DS_{IR} Plus front. A green handle (see red arrow, Figure 1-23) indicates that an INOMAX cylinder valve is open.

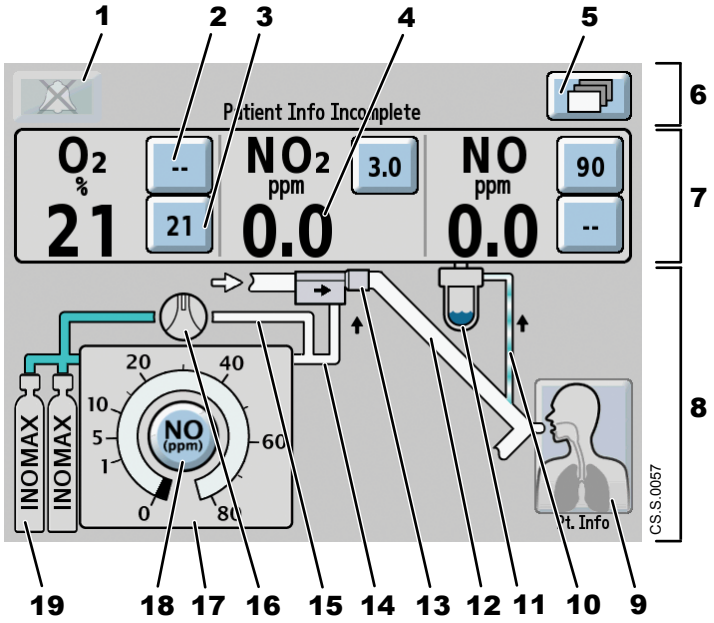

1. Alarm Silence Button
2. Upper Alarm Limit Button
3. Lower Alarm Limit Button
4. Monitored Value
5. Menu Button
6. Text Message Area
7. Monitor Area
8. Graphical Area
9. Patient Information Button
10. Sample Line Icon
11. Water Bottle Icon
12. Inspiratory Limb Icon
13. Injector Module Icon
14. Delivery Line Icon
15. Pneumatic Backup Line Icon
16. Pneumatic Backup Switch Icon
17. Delivery Setpoint Display
18. NO Delivery Setpoint Button
19. Cylinder Icon

Figure 1-22 The DS_{IR} Main screen

NOTES:

- When the INOmax DS_{IR} Plus is used with the Transport Regulator/Cap Assembly, only the right INOMAX cylinder appears.
- Select the **NO Delivery Setpoint button** to select the dose setting.
- The **NO Delivery Setpoint button** is inactive (greyed-out) when a dose is not set and a cylinder is not detected.

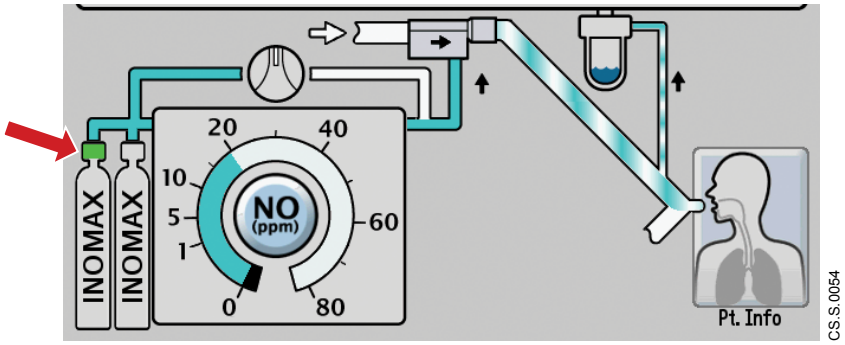

Figure 1-23 Dosage and gas flow

1.7.2 Adjusting Dose Settings

The INOMAX dose can be adjusted from 0.1 ppm to 80 ppm. Each click on the control wheel corresponds to a dose change. The incremental dose per click changes, depending on the dose setting range. For example, for a dose setting between 1 and 40 ppm, each click is 1 ppm.

Table 1-7 Variable Click Dose Settings

Dose Setting Range	Dose Change Per Click
< 1 ppm	0.1 ppm
1 to 40 ppm	1 ppm
40 to 80 ppm	2 ppm

NOTE: When a dose setting is set from zero, the INOmax DS_{IR} Plus automatically sets **NO monitored alarm** limits at 50% above and 50% below the set dose.

To change dose settings:

1. Select the **NO Delivery Setpoint button** (Figure 1-24).
2. Rotate the control wheel to the desired setting.

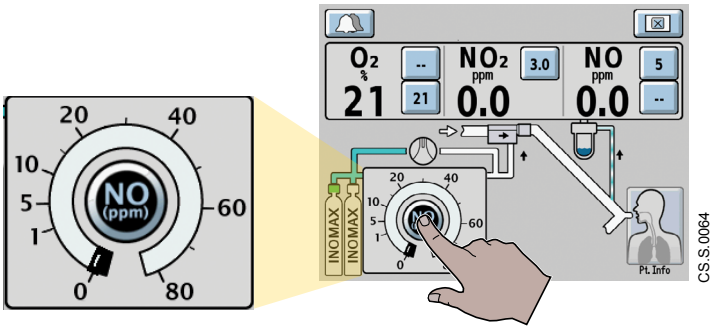

Figure 1-24 Selecting NO Delivery Setpoint

3. Select the Control Wheel (see **1**, Figure 1-25) or select the **NO Delivery Setpoint button** (**2**) to confirm the NO dose.

   The INOmax DS_{IR} Plus automatically sets the **High and Low NO alarm** settings for the first setting only.

   A two-minute lockout period will prevent the **Low NO monitoring alarm** from occurring while the measured value stabilizes.

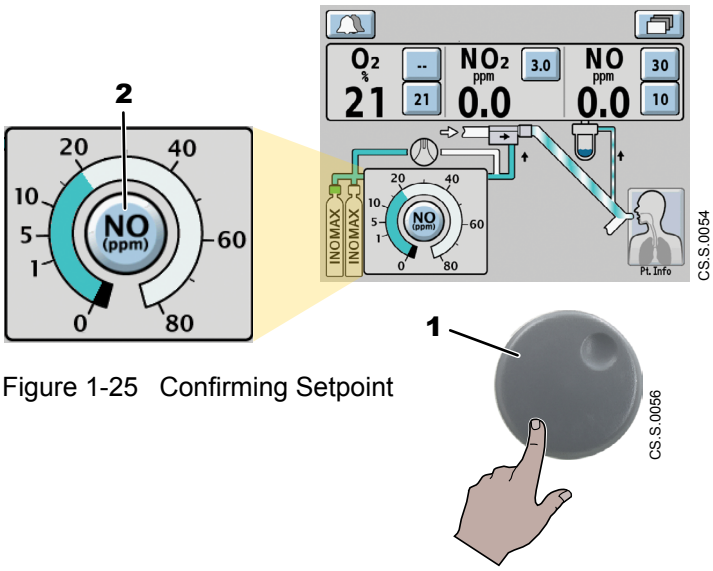

Figure 1-25 Confirming Setpoint

1.7.3 Setting O_2, NO_2, and NO Alarm Limits

WARNING

Do not set upper and lower alarm limits to extreme values. Extreme alarm limit settings can undermine the function of the alarm system.

The first time a dose is set from zero, the upper and lower NO alarm limits are set automatically 50% above and 50% below the set dose. The user can adjust O_2, NO_2, and NO alarm settings:

- Adjustable alarm limits appear on the buttons to the right of the O_2, NO_2, and NO monitored values. **The high-level alarm button** appears above the **low-level button**.
- When an alarm occurs, the button of the exceeded setting flashes red (see arrow, Figure 1-26).

To change an alarm setting:

1. Select a **high** or **low-level button** for the O_2, NO_2, or NO monitor.
2. Rotate the Control Wheel to the new setting.
3. Push the Control Wheel or select the **alarm button** again to confirm the new value.

   If the new alarm level is not confirmed within 20 seconds, an audible tone sounds and the alarm level returns to its previous value.

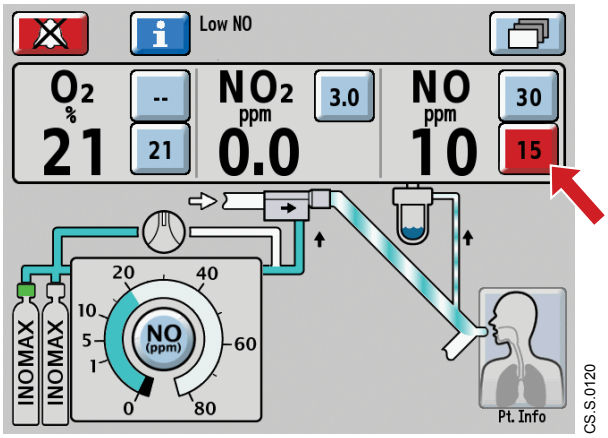

Figure 1-26 Main Screen; alarming for Low NO

1.7.4 The Menu Screen

When the **Menu button** on the **Main screen** is selected, the **Menu screen** appears (Figure 1-27). The top portion of the screen (**2**) remains the same as before, but in the lower portion a menu of 6 buttons appears.

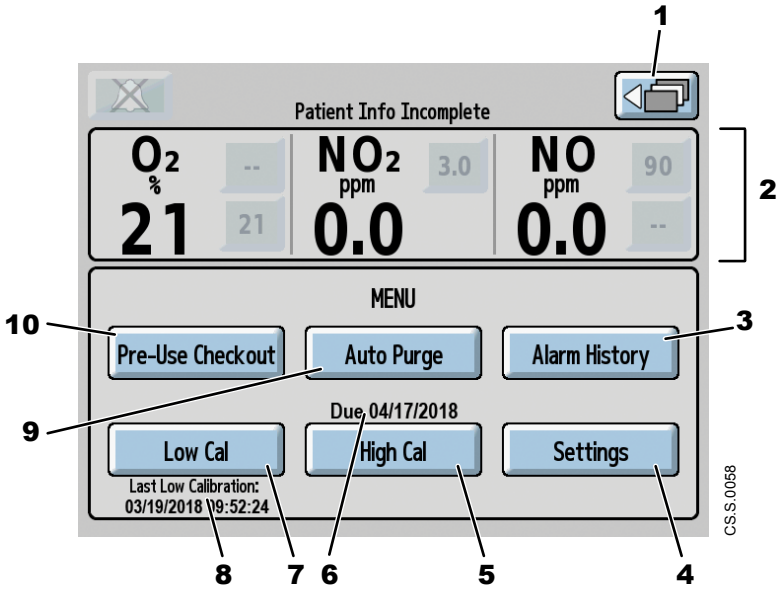

1. Return to Previous Level Button
2. Monitor Area
3. View Alarm History Screen Button
4. Settings Button
5. High Calibration Button
6. High Calibration Due Date
7. Begin Low Calibration Button
8. Last Low Calibration Date and Time
9. Begin Auto Purge Button
10. Begin Pre-Use Checkout Button

Figure 1-27 The MENU screen

NOTE: The **Pre-Use Checkout** and **Auto Purge buttons** are inactive (greyed-out) if a dose is set.

1.7.5 The Settings Screen

1. Select the **Settings button** from the **Menu screen**.
2. On the **Settings screen** a **Circuit Flow (LPM) graph** and a **Calculated Delivery graph** are displayed (Figure 1-28, **7** and **8**).

   The **Circuit Flow (LPM) graph** displays the real-time peak and average flow rate (over a 10 second time period) as measured by the Injector Module.

   - The area in green represents the circuit flow range where the INOmax DS_{IR} Plus system is rated to deliver NO from 1-80 ppm.
   - The yellow areas of the graph indicate where some inaccuracy of NO delivery is to be expected.
3. Refer to *Section 1.6.1.1 Maximum NO Delivery*.

   The **Calculated Delivery Graph** displays the delivery subsystem calculated % error in NO delivery compared to the desired set dose over a 10-second time period.

   The green to yellow transition points are defined to be NO delivery error of +20% (over-delivery) to -20% (under-delivery) compared to the desired NO set dose. High set dose levels, high peak inspiratory flows and proportional NO flow control inaccuracies can contribute to the indicating arrow varying from the ideal midpoint.

   An example of where the graph would represent under-delivery would be in a high flow, high dose condition. The high flow would be represented as > 60 L/min on the **circuit flow graph**. A dose of 80 ppm may create an under-delivery condition (where greater than 6.35 L/min of INOMAX flow would be required) resulting in the calculated graph cursor moving to the (-) yellow area on the graph.

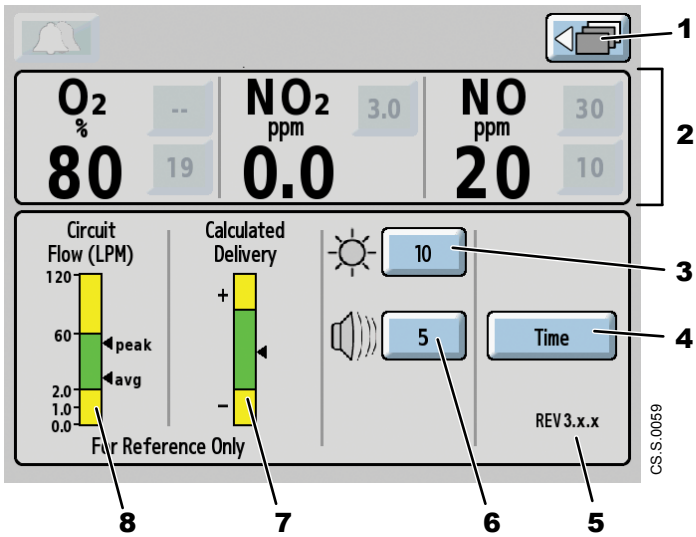

1. Return to Previous Level Button
2. Monitor Area
3. Display Brightness Button
4. Time Adjust Button
5. Software Revision
6. Alarm Volume Button
7. Calculated Delivery Graph
8. Circuit Flow Rate Graph

Figure 1-28 Settings screen

NOTES:

- If the Injector Module is not detected, or fails, the **Circuit Flow (LPM) graph** will be inactive.
- If the INOMAX dose is not set, the **Calculated Delivery graph** will be inactive.

4. From the **Settings screen** the following controls can be adjusted:
   - **Brightness** ranges from 1 (dim) to 10 (bright).
   - **Alarm Volume** 1 (soft) to 5 (loud).
   - **Time** (time offset): **Hour and Minute buttons** allow you to adjust the time to local time zone (Figure 1-29).

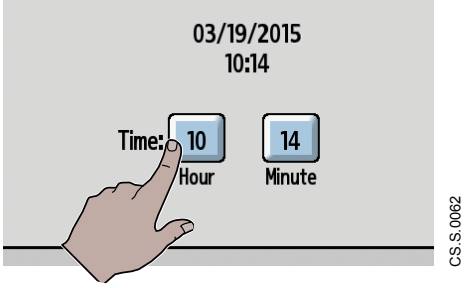

Figure 1-29 Changing the time setting

Mallinckrodt™ Pharmaceuticals

INOmax DS IR® Plus

2/ Setting Up Components

Part No. 21204 Rev-03
2024-06

Mallinckrodt™ Pharmaceuticals

Setting Up Components

INOmax DS IR® Plus

2/ Setting Up Components

Part No. 21204 Rev-03
2024-06

2 Setting Up Components

2.1 Providing Electrical Power to the INOmax DS_{IR} Plus

WARNING
Position all cables and hoses to help prevent damaging or occluding them.

1. Make sure that all cords and cables are in good working condition.
2. On the back of the INOmax DS_{IR} Plus, ensure the electrical cord is connected to the electrical cord inlet and the clamp is tight (Figure 2-1).
3. Connect the electrical cord to an emergency-power-backed hospital-grade outlet, if possible.

NOTE: Normally keep the power cord connected to an electrical outlet to maintain a full battery charge. Some situations, such as transport, may require temporarily disconnecting the power cord.

4. At the front of the INOmax DS_{IR} Plus, make sure that the mains power indicator is ON (Figure 2-2).

WARNING
Arrange power cord, Patient Gas Sample Line and Filter, injector tubing and Injector Module cable to avoid entanglement, strangulation and/or a trip hazard.

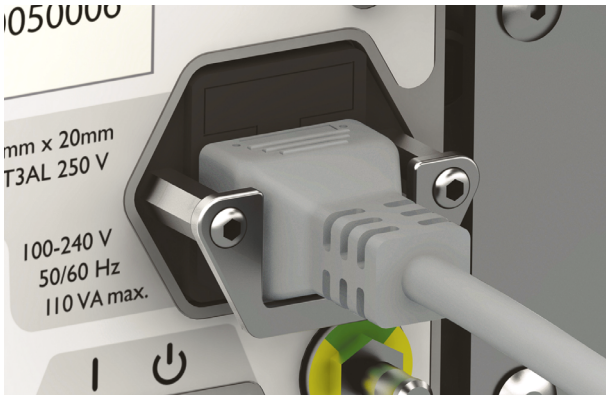

Figure 2-1 Electrical cord and clamp

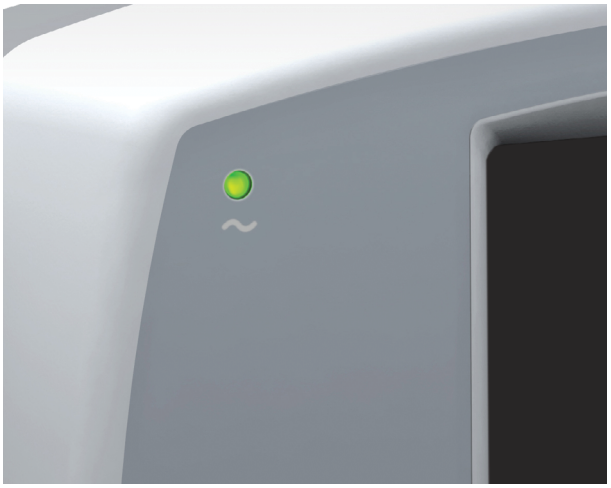

Figure 2-2 Power Indicator (ON)

2.2 Loading INOMAX Cylinders onto the Cart

WARNINGS

Do not use the INOmax DS_{IR} Plus unless the INOMAX cylinder and regulator have been purged. Purging the INOMAX cylinder and regulator minimizes NO_2 exposure.

If the INOmax DS_{IR} Plus is not used immediately following setup, and is pressurized for more than 10 minutes, repeat auto-purge procedure.

A new INOMAX cylinder and regulator must be purged before use to ensure the patient does not receive greater than 1.0 ppm of NO_2.

Do not remove or deface INOMAX cylinder labeling.

Do not modify INOmax DS_{IR} Plus equipment or accessories.

- **Do not lift an INOMAX cylinder by its valve or valve protection cap or by using a chain, sling, or magnet.**
- **Do not use a hammer, pry, or wedge to loosen a valve or protection cap. The valve and protection cap operate by hand.**
- **Do not use an adapter to connect an INOMAX cylinder to the system.**
- **Do not allow oil, grease or other substances to contact INOmax DS_{IR} Plus gas connections.**
- **Do not repair a leak on an INOMAX cylinder valve or its safety relief device.**
- **Do not operate equipment that is leaking or ship a leaking INOMAX cylinder.**

Not following these warnings can result in damage to the INOmax DS_{IR} Plus and INOMAX cylinders. Always secure an INOMAX cylinder when it is not in use.

CAUTIONS

INOMAX cylinders should be stored as described in the INOMAX label:

- Do not store INOMAX cylinders in standing water.
- Do not store INOMAX cylinders where they can contact corrosive substances.
- Do not store INOMAX cylinders close to objects that can cut or abrade them.
- Do not store INOMAX cylinders next to a walkway, elevator, or platform edge.

Storing INOMAX cylinders in these conditions can cause damage to the INOMAX cylinders. Always keep stored INOMAX cylinders properly secured according to hospital guidelines.

Always load two INOMAX cylinders to ensure uninterrupted delivery of INOMAX to the patient.

1. Connect the infrared cable from the top of the INOmax DS_{IR} Cart or Transport Regulator/Cap Assembly to the back of the INOmax DS_{IR} Plus, making sure to align the red dots on the cable and the back of the device (Figure 2-3).

CAUTION

Do not attempt to plug the cable into the INOblender gas outlet or the purge port! Damage to the electrical connection could interrupt or delay therapy.

For additional information regarding the Transport Regulator/Cap Assembly, refer to *Chapter 4 Using the INOmax DS_{IR} Plus During Transport*.

2. Load two cylinders into the Cart.
3. Attach the mounting strap to keep the INOMAX cylinder in place. For detailed information, refer to *Section 1.5.5 The INOmax DS_{IR} Cart*.

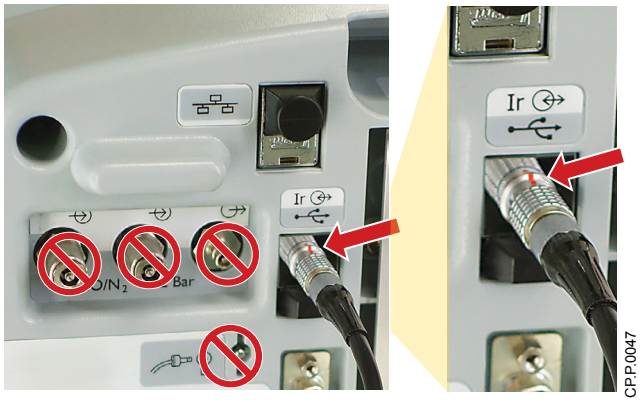

Figure 2-3 Connecting the infrared cable

2.3 Connecting a Regulator to an INOMAX Cylinder

1. Remove the INOmeter lock from the INOmeter (see *Section 3.3.2 Using the INOmeter*).
2. Remove the cylinder valve cap from the cylinder valve.
3. Make sure that the white plastic tip on the regulator is in place and not chipped or cracked (see Figure 2-4).

   NOTE: If the tip is damaged, the Regulator must be replaced. Contact Customer Service to arrange for a replacement.
4. Place the end of the regulator with the white plastic tip into the valve outlet.
5. Turn the regulator handle clockwise to fully tighten the regulator. Hand tighten only.

Figure 2-4 Connecting a regulator

WARNING

Do not start INOMAX drug delivery if the cylinder pressure is less than 34.5 bar (500 psig). Replace the INOMAX cylinder if pressure is less than 13.8 bar (200 psig). Using an INOMAX cylinder with low pressure can cause drug delivery to stop should the cylinder become depleted.

2.4 Attaching a Regulator Hose to the INOmax DS_{IR} Plus

CAUTION

Do not use the INOmax DS_{IR} Plus without checking the INOMAX gas inlets. Proper use of the INOMAX inlets is essential for safe and effective delivery of INOMAX. Before the INOmax DS_{IR} Plus is used, make sure that the INOMAX connectors are in good operating condition.

The INOmax DS_{IR} Plus has two INOMAX gas inlets that connect with INOMAX regulator hoses.

1. At the back of the INOmax DS_{IR} Plus, visually inspect the two INOMAX gas inlets for signs of wear or damage.
2. Make sure that the knurled sleeve is set in the unlocked position (see **A**, Figure 2-5).
3. Insert the regulator hose into one of the INOMAX gas inlets (see red arrow, Figure 2-6).

   When the connector is inserted properly, the knurled sleeve moves into the forward position, locking the hose in place (**B**, Figure 2-5).

To disconnect the regulator hose from the INOMAX gas inlet, grasp the knurled sleeve and push inward (towards the INOmax DS_{IR} Plus) until the hose connector disengages.

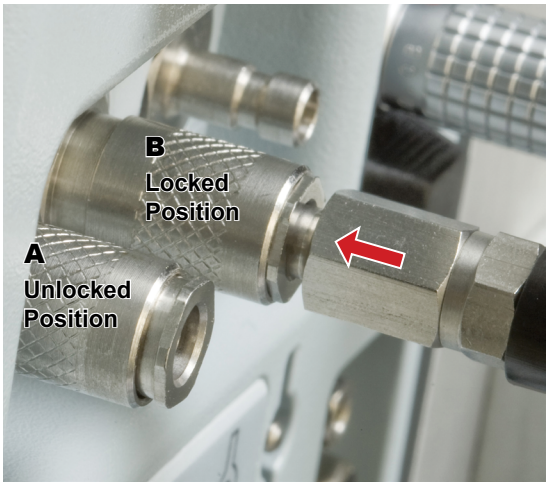

Figure 2-5 INOmax DS_{IR} Plus gas inlets

2.5 Connecting the INOblender

To connect the INOblender:

1. Ensure the INOMAX regulator hose is connected to the INOMAX gas inlet (see **1**, Figure 2-6).
2. Connect the INOblender inlet hose (**4**) to the INOblender outlet (**2**) at the back of the INOmax DS_{IR} Plus.
3. Slide the Quick-Connect cover into place (**3**).
4. Connect the 3.5 bar (50 psig) O_2 hose to the O_2 inlet fitting at the back of the INOblender (**5**), and connect the other end to a wall source or an O_2 cylinder.

NOTE: If the INOblender is used as a stand-alone device, refer to *Section 4.4 Using the INOblender for Transport as a Stand-alone Device*.

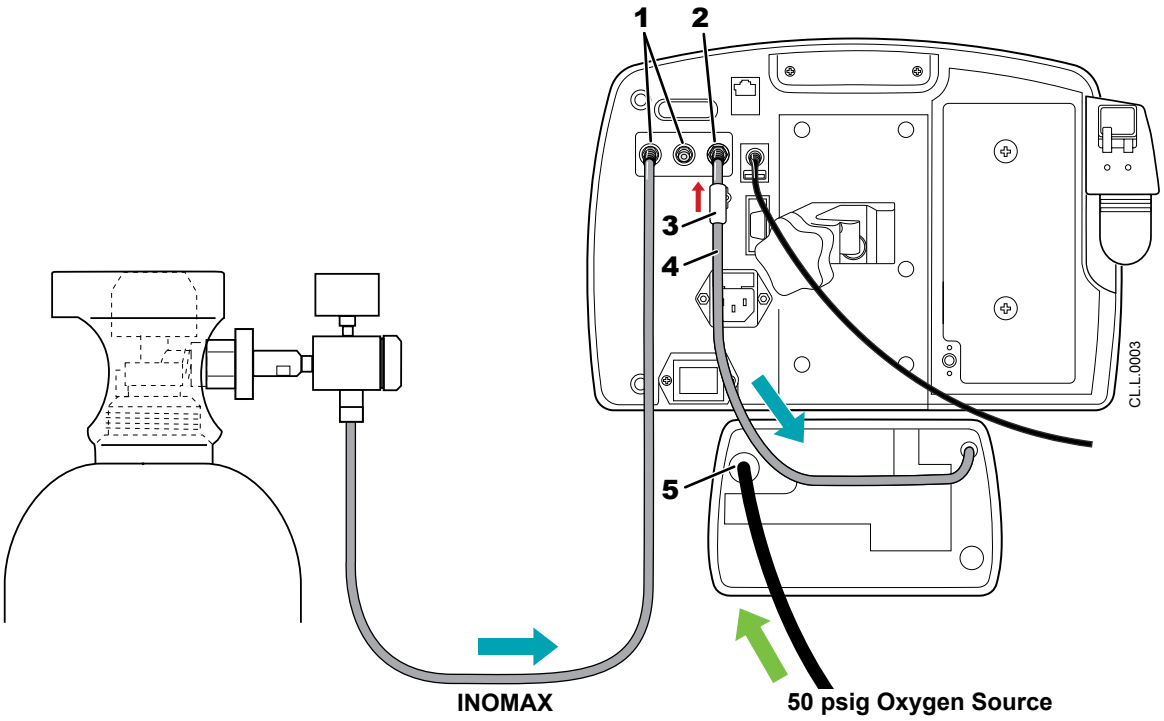

Figure 2-6 INOblender connections

2.6 Connecting the Injector Module

1. At the front of the INOmax DS_{IR} Plus, insert one end of the Injector Module electrical cable into the Injector Module cable inlet, (see Figure 2-7, **1**) lining up the red markings (**2**).
2. Insert the other end of the Injector Module electrical cable into the cable inlet on the Injector Module (**3**) lining up the red markings.
3. At the front of the INOmax DS_{IR} Plus, insert one end of the injector tube to the Injector Module tubing outlet and the other end to the Injector Module (**4**).

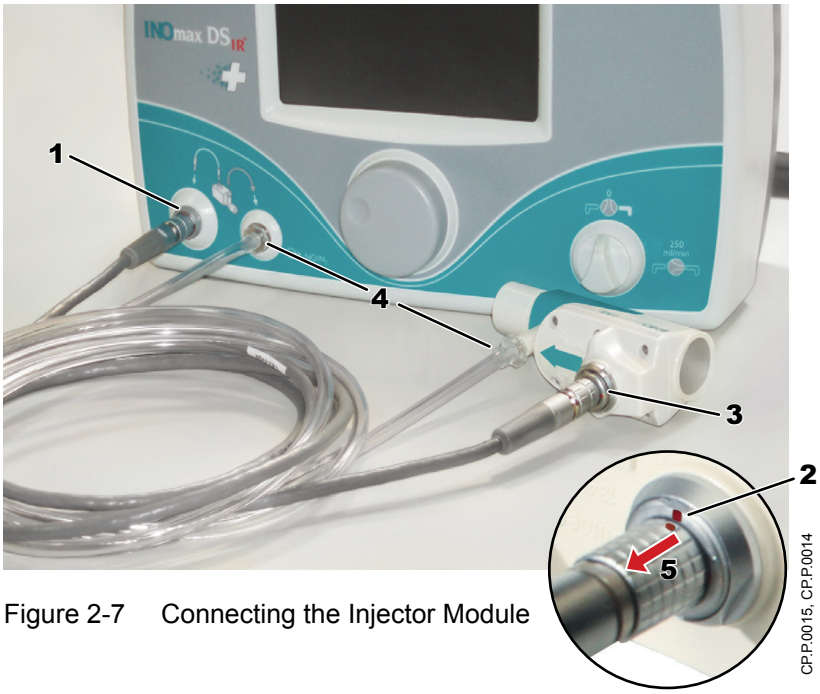

Figure 2-7 Connecting the Injector Module

NOTES:

- Either style (PN 1605-3038-000 or PN 90849) of Injector Module may be used with the INOmax DS_{IR} Plus.
- To remove the Injector Module cable, pull the knurled sleeve back before removing the cable (**5**).

2.7 Checking the Water Separator Cartridge and Water Bottle

1. At the side of the INOmax DS_{IR} Plus, confirm that the Water Separator Cartridge (see **1**, Figure 2-8) and the Water Bottle (**2**) are in place.

   For detailed information refer to *Section 6.4 Emptying the Water Bottle* and *Section 6.5 Replacing the Water Separator Cartridge*.

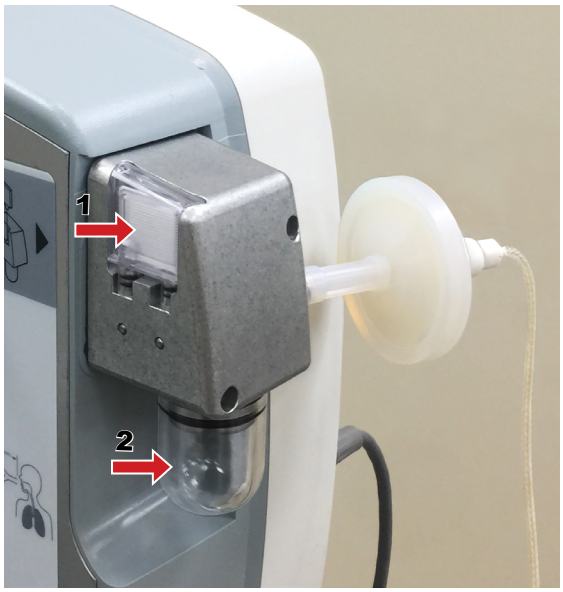

Figure 2-8 Water Trap Assembly, rear view

2.8 Attaching the Patient Gas Sample Line and Filter

1. Remove a new Patient Gas Sample Line and Filter from the package.
2. Grasp the Filter/Gas Sample Line connection (white shrink-wrapped), not along the circumference of the filter (see Figure 2-9).
3. Connect the filter end of the Patient Gas Sample Line and Filter to the Sample Line inlet port (**1**).
4. Turn clockwise to tighten the Filter to the Sample Line inlet port Luer connector on the front of the INOmax DS_{IR} Plus, and do not overtighten (**2**).

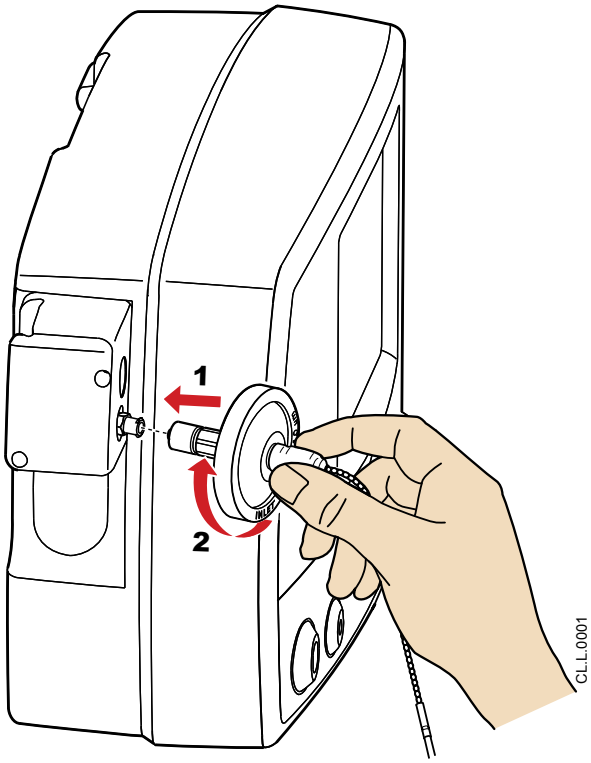

Figure 2-9 Connecting the Patient Gas Sample Line and Filter

Mallinckrodt™ Pharmaceuticals

INOmax DS$_{IR}$® Plus

3/ Using the INOmax DS$_{IR}$ Plus

Part No. 21204 Rev-03
2024-06

Mallinckrodt™ Pharmaceuticals

INOmax DS$_{IR}$® Plus

Using the INOmax DS$_{IR}$ Plus

3/ Using the INOmax DS$_{IR}$ Plus

Part No. 21204 Rev-03
2024-06

3 Using the INOmax DS_{IR} Plus

3.1 Turning On the INOmax DS_{IR} Plus

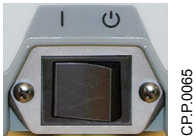

Figure 3-1 On/Standby switch

1. At the back of the INOmax DS_{IR} Plus, using the On/Standby switch (see Figure 3-1), turn on the INOmax DS_{IR} Plus and confirm that the speaker and buzzer sound in sequence.

   The **Startup Screen** appears, with a self-test progress indicator (see Figure 3-2). The device then automatically begins a Low Calibration in the top portion of the screen, and the **Automated Pre-Use Checkout** wizard in the lower portion. The first section of the wizard is **Initial Connections** (see arrow, Figure 3-3).

   It is strongly recommended to use the wizard.

Figure 3-2 Startup screen

2. Select the **Next button** (Figure 3-3) to be guided through the initial connections steps, and on to the Auto Purge process. *Section 3.2 Automated Pre-Use Checkout* explains how to proceed with the Automated Pre-Use Checkout.

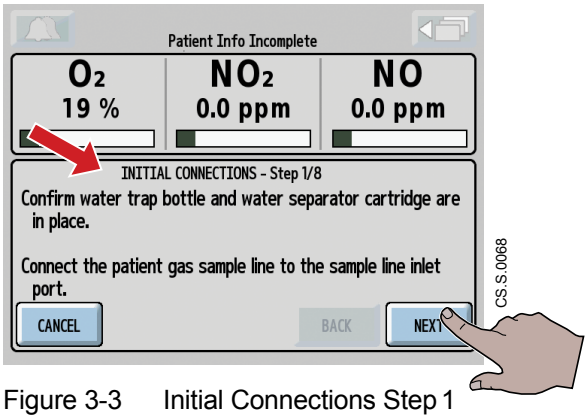

Figure 3-3 Initial Connections Step 1

NOTES:

- If you do not want to continue using the wizard, select **Cancel** to exit and return to the **Main screen**. Refer to the *Appendix A-Abbreviated Manual Pre-use Checkout* instructions.
- Once returned to the **Main screen**, select the **Cancel Low Cal button** (Figure 3-4) to cancel Low Calibration.
- If the automatic Low Calibration is canceled, the INOmax DS_{IR} Plus attempts calibration every 15 minutes until it is successful.
- If the Pre-Use Checkout wizard is cancelled, it can be re-started on the **Settings screen**.
- Two **INOMAX cylinder icons** appear on the screen indicating that the INOmax DS_{IR} Plus recognizes the INOMAX cylinders (red arrow, Figure 3-4). If the INOMAX cylinder icons do not appear, refer to *6. Cylinder not Detected, in Section 7.2 Identifying and Resolving Alarms*.

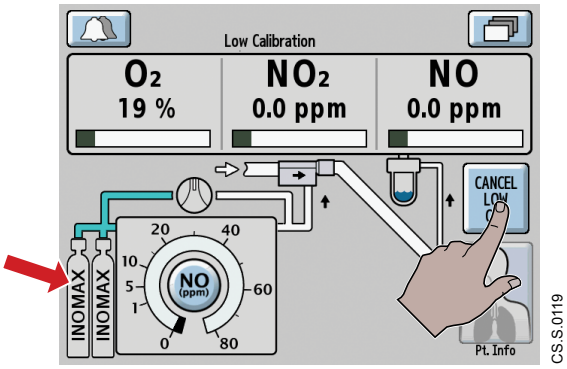

Figure 3-4 Cancelling Low Cal

3.2 Automated Pre-Use Checkout

The Automated Pre-Use Checkout is an on-screen wizard for preparing the INOmax DS_{IR} Plus for use with a patient. The wizard includes 5 sections:

- **Initial Connections**
- **Automated Purge**
- **Backup Delivery Test**
- **Performance Test** (INOmax DS_{IR} Plus)
- **INOblender Test**

3.2.1 Initial Connections

The first section describes attaching the various components needed to treat the patient. Figure 3-5 shows the content of the screens in this section of the wizard.

Follow the prompts provided by the wizard screens to complete this section.

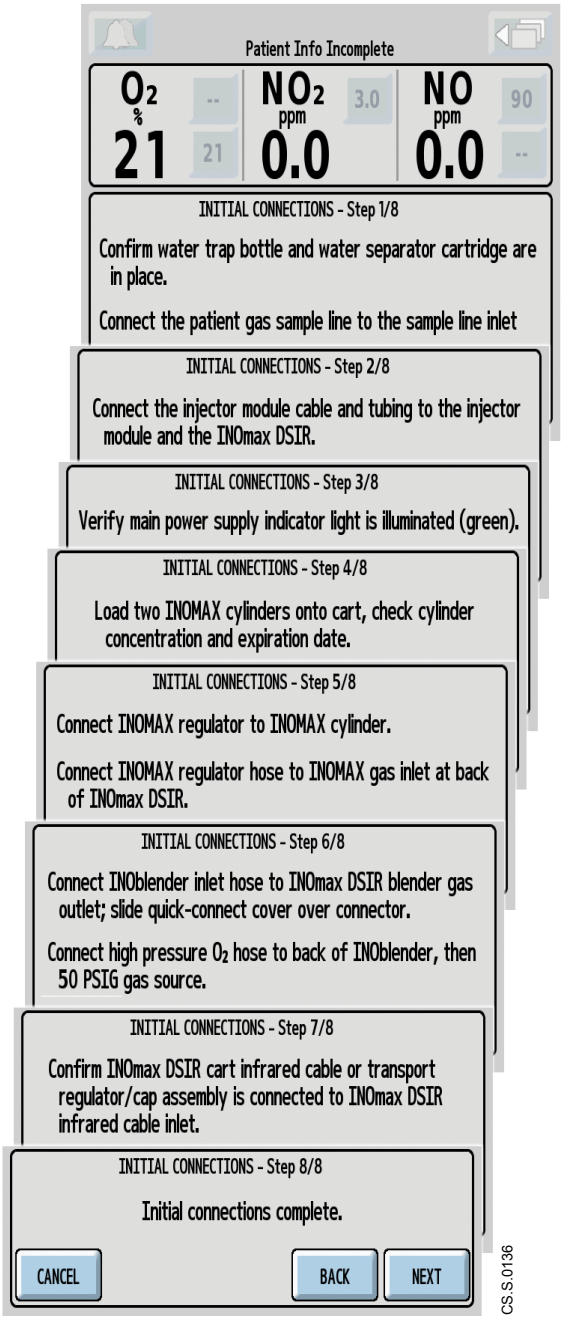

Figure 3-5 Content of INITIAL CONNECTIONS screens of Pre-Use Checkout wizard

3.2.2 Automated Purge

A new INOMAX cylinder and regulator must be purged before use to ensure the patient does not receive greater than 1.0 ppm of NO_2.

Each time the system is used, it must be entirely purged of NO_2. This section of the Pre-Use Checkout wizard simplifies the process of doing a system purge.

NOTES:

- After the **Automated Purge** completes, wait for the Low Calibration to complete, if it hasn't already done so.
- Any time the INOmax DS_{IR} Plus is not being used for treatment, an **Automated Purge** can also be completed quickly by selecting the [Auto Purge] **button** on the **Menu screen** and following the software prompts.

Figure 3-6 displays the content of the **Automated Purge screens**.

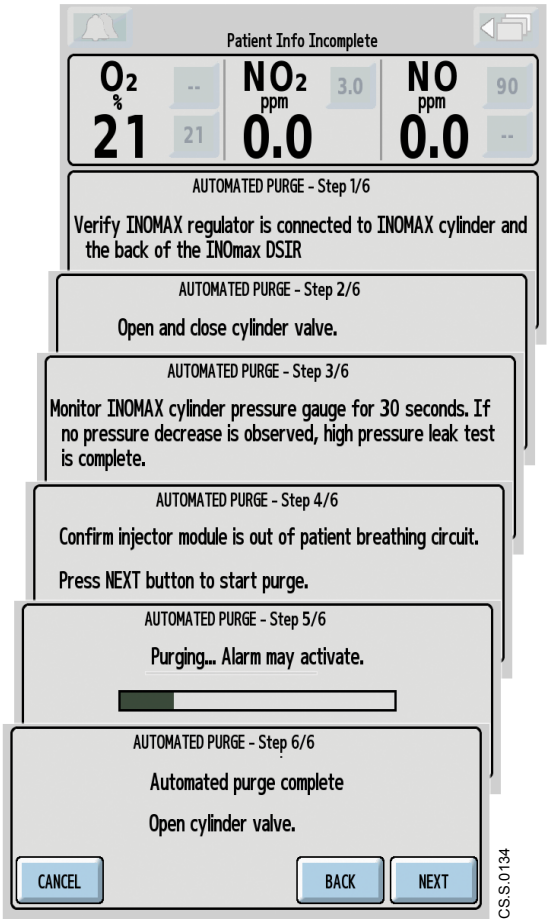

Figure 3-6 Content of the AUTOMATED PURGE screens

At this point in the wizard, the user is prompted to assemble pre-use set-up connectors and tubing.

NOTE: Pressing the [SHOW DIAGRAM] button displays a line drawing (see Figure 3-7) of how the pre-use circuit should be assembled.

Selecting **Exit** on the **Connections Diagram screen** returns the user to the **Automated Pre-Use Checkout** wizard.

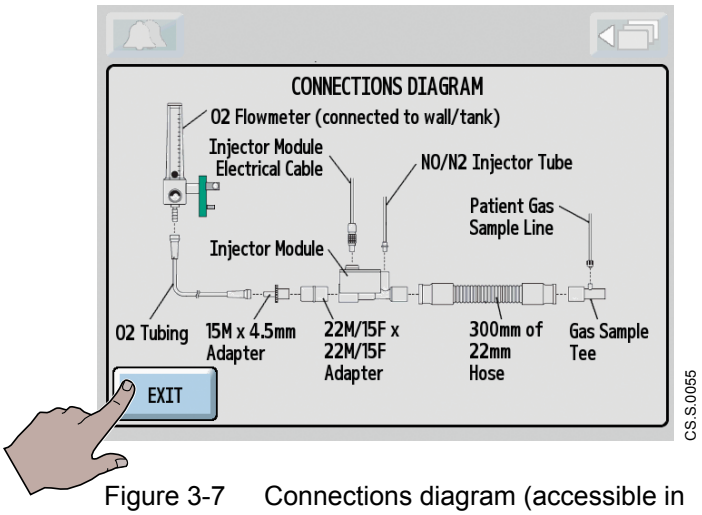

Figure 3-7 Connections diagram (accessible in the Performance Test)

3.2.3 Backup Delivery Test

The **Backup Delivery Test** is the next portion of the Automated Pre-Use Checkout. It verifies that the Integrated Pneumatic Backup is performing within specifications, and is prepared to be used for backup.

Figure 3-8 displays the content of the screens which prompt the user to make adjustments, and to give input on the INOmax DS_{IR} Plus screen.

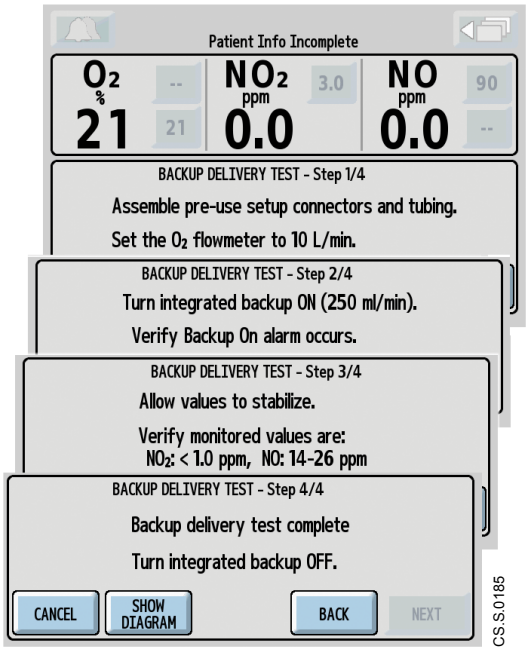

Figure 3-8 Content of the BACKUP DELIVERY TEST screens

3.2.4 Performance Test (INOmax DS_{IR} Plus)

The **Performance Test** is the next section of the Pre-Use Checkout wizard. The performance test is required to confirm the injector module and internal components are functioning properly and within specification before starting therapy on a patient. (Figure 3-9).

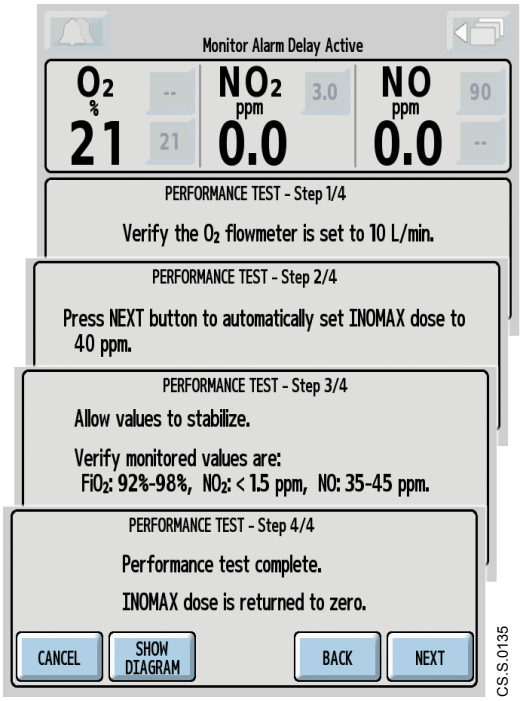

Figure 3-9 PERFORMANCE TEST screens content

3.2.5 INOblender Test

The **INOblender Test** is the final portion of the Pre-Use Checkout. It verifies that the INOblender is performing within specifications, and is prepared to be used for backup.

Figure 3-10 displays the content of the screens which prompt the user to make adjustments to the pre-use circuit, and to give input on the INOmax DS_{IR} Plus screen.

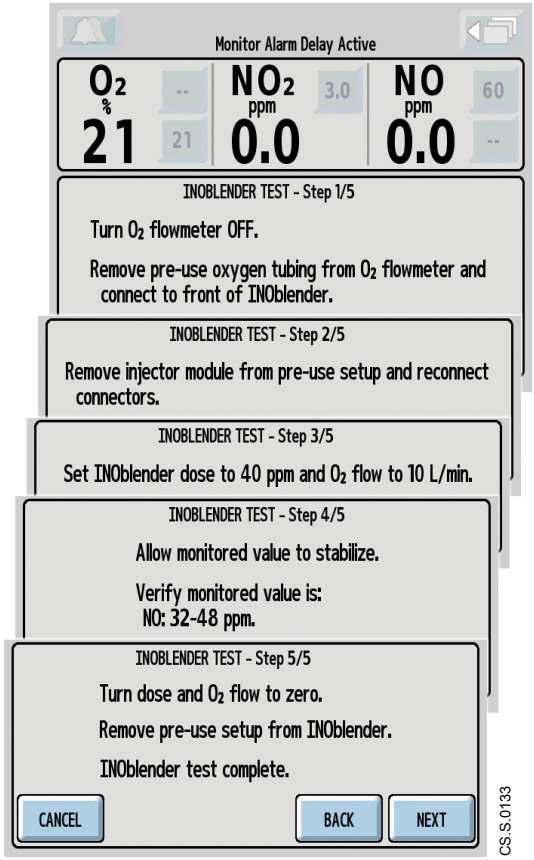

Figure 3-10 INOBLENDER TEST screen content

When this portion of the wizard is almost done, the INOmax DS_{IR} Plus screen displays **INOblender Test - Step 5/5**. This step directs the user to complete the test by turning O_2 flow off, and removing the pre-use setup from the INOblender.

When the **INOblender Test** is finished the screen displays a notification that the entire **Automated Pre-Use Checkout** wizard is complete (see Figure 3-11).

If therapy is to begin within ten minutes, select the **Next** button to proceed. If there will be a delay of at least ten minutes, continue with the following section, *3.2.6 Depressurizing the Regulator Supply Line.*

WARNINGS

If the INOmax DS_{IR} Plus is not going to be used on a patient within 10 minutes, depressurize the regulator supply line.

If the INOmax DS_{IR} Plus is not used and is pressurized for more than 10 minutes,
repeat purge procedure.

If the INOmax DS_{IR} Plus is depressurized and not used on a patient within 24 hours, repeat the pre-use procedure.

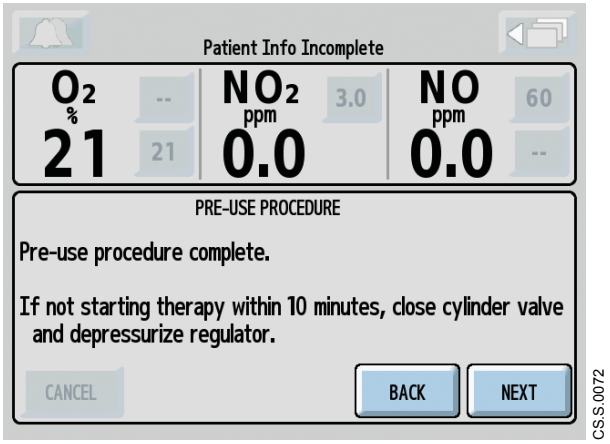

Figure 3-11 Final Pre-Use Checkout screen

3.2.6 Depressurizing the Regulator Supply Line

Depressurizing the regulator supply line removes any buildup of NO_2 and allows the use of the INOmax DS_{IR} Plus at any time within the next 24 hours. If the regulator supply line is not depressurized, the INOmax DS_{IR} Plus must be used within 10 minutes after completing the **Automated Pre-Use Checkout**.

To depressurize the INOMAX regulator supply line:

1. On the INOMAX cylinder, rotate the INOMAX cylinder handle clockwise to fully close the valve (Figure 3-12).

Figure 3-12 Closing the regulator valve

2. At the back of the INOmax DS_{IR} Plus, remove the regulator hose from the INOMAX gas inlet and firmly push the connector against the pin in the purge port (see Figure 3-13). This depressurizes the regulator.

Figure 3-13 Purging the regulator hose

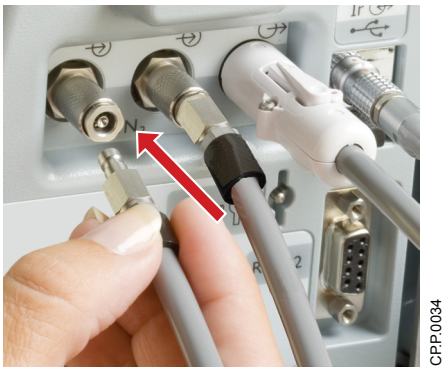

Figure 3-14 Re-connecting the regulator hose

3. When the regulator pressure gauge reads zero, remove the regulator hose from the purge port and connect it to the INOMAX gas inlet (Figure 3-14).

If difficulties are encountered in connecting the regulator hose, refer to *Section 2.4 Attaching a Regulator Hose to the INOmax DS_{IR} Plus.*

3.3 Preparing for Patient Use

Before the INOmax DS_{IR} Plus is used with a patient, review the warnings in *Section 1.4.1 Warnings (Complete List)* and those that follow.

WARNINGS

The INOmax DS_{IR} Plus subtracts gas from the breathing circuit via the gas sampling system at a rate of 230 mL per minute. This can adversely affect the sensitivity of a flow-triggered synchronized breath mode of some gas delivery systems. Always check the trigger sensitivity of the gas delivery system after connecting the INOmax DS_{IR} Plus to the breathing circuit.

Abrupt discontinuation of INOMAX can lead to worsening oxygenation and increasing pulmonary artery pressure, i.e., Rebound Pulmonary Hypertension Syndrome (refer to the INOMAX package insert). To avoid abrupt discontinuation, use the INOblender as a manual backup or Integrated Pneumatic Backup immediately to reinstate INOMAX therapy.

Do not discontinue INOMAX delivery if the high NO_2 alarm activates. Assess the delivery system for proper set up while maintaining INOMAX delivery, and adjust INOMAX and/or FiO_2 as appropriate. Refer to the INOMAX package insert for details on the effects of NO_2. If the cause of increased NO_2 levels cannot be determined, contact Customer Support (see back cover).

3.3.1 Connecting to a Conventional Gas Delivery System

NOTE: Connections to various ventilators, gas delivery systems, and their corresponding disposable circuits are unique to each manufacturer (*refer to Section 3.3.5 Connecting to Gas Delivery Systems*).

WARNINGS

Do not use the INOmax DS_{IR} Plus with a BiPap system or other single-lumen breathing systems with bidirectional flow. Using the INOmax DS_{IR} Plus with these systems can result in an INOMAX over-delivery or interruption in INOMAX delivery.

The INOmax DS_{IR} Plus is designed to function within specifications listed in *Chapter 8 Product Specifications.* **Do not use the INOmax DS_{IR} Plus outside the specified ranges.**

CAUTION

It is recommended to use the INOmax DS_{IR} Plus with active humidification. Sampling dry gas may shorten the life of the gas sensors.

1. Connect the Injector Module (see **11**, Figure 3-16) prior to the humidifier chamber (**14**) on the dry side of the breathing circuit to ensure correct flow measurement.

NOTE: If it is not possible to connect the Injector Module directly to the dry side of the humidifier, a filter or length of tubing (**9**) may be placed between the inspiratory outlet of the ventilator (**5**) and Injector Module which will condition the ventilator flow.

2. Insert the Gas Sample Tee (**17**) on the inspiratory side of the ventilator circuit, 15-30 cm (6-12 inches) from the patient wye (**1**).
   - The distance between the Injector Module and the Gas Sample Tee must be greater than 60 cm (24 inches). This ensures proper gas mixing, minimizes the sampling of mixed inspired/expired concentrations, and ensures correct patient NO/NO_2 measurement.
   - Make sure that the Gas Sample Tee port points upward. This helps to avoid fluid accumulation in the Patient Gas Sample Line and Filter.
3. On the Injector Module, note the airflow direction arrow (see Figure 3-15). Flow from the ventilator must pass through the Injector Module in the direction of the arrow.

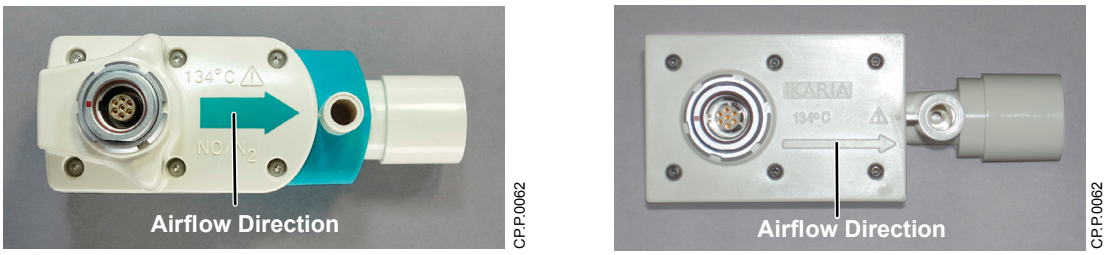

Figure 3-15 Injector Module top view

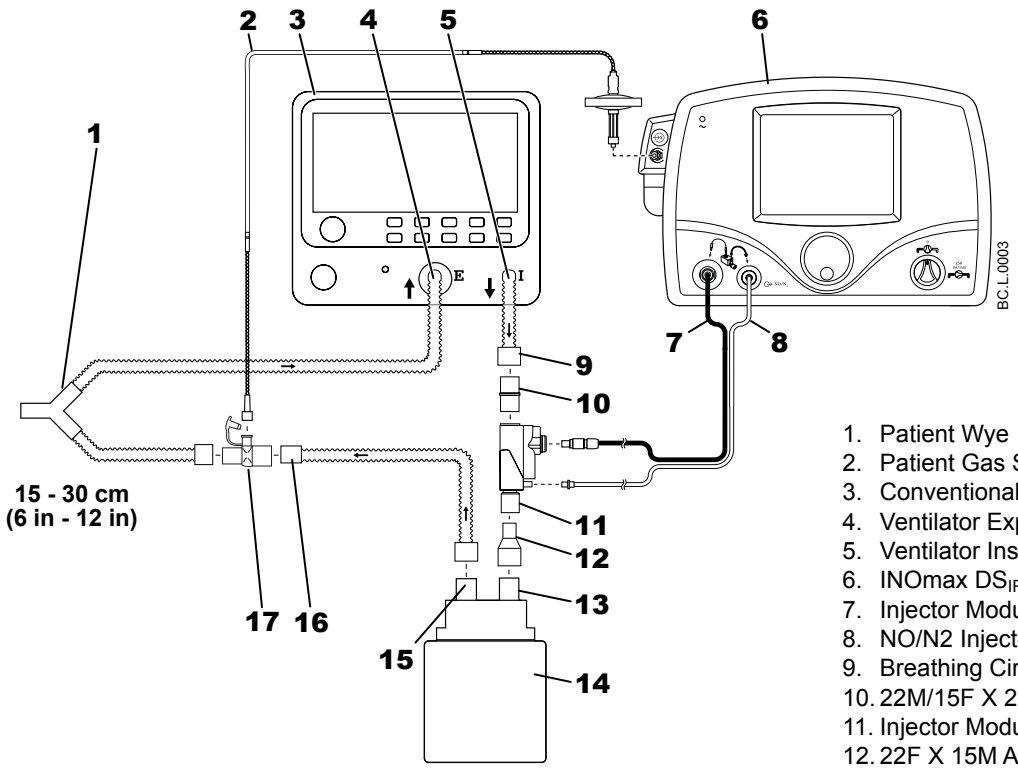

1. Patient Wye
2. Patient Gas Sample Line and Filter
3. Conventional Ventilator
4. Ventilator Expiratory Port
5. Ventilator Inspiratory Port
6. INOmax DS_{IR} Plus
7. Injector Module Electrical Cable
8. NO/N2 Injector Tube
9. Breathing Circuit Hose
10. 22M/15F X 22M/15F Adapter
11. Injector Module
12. 22F X 15M Adapter
13. Humidifier Inlet
14. Humidifier
15. Humidifier Outlet
16. Inspiratory Breathing Circuit Hose
17. Gas Sample Tee

Figure 3-16 Conventional gas delivery system circuit diagram

4. Select the **NO Delivery Setpoint button** on the **Main screen**. On the INOmax DS_{IR} Plus, rotate the Control Wheel to set the NO dose (see *Section1.7.2 Adjusting Dose Settings)*.
5. Confirm the change by pressing the Control Wheel or by selecting the button again.
6. Set the user-adjustable alarm settings on the INOmax DS_{IR} Plus and on the ventilator or breathing system. For detailed information, refer to *Section 7.2 Identifying and Resolving Alarms*.

3.3.2 Using the INOmeter

The INOmeter is the cylinder valve handle on the INOMAX cylinder and is used to open and close the cylinder valve. The INOmeter is also a counter which records the amount of time the INOMAX cylinder valve is open.

The INOmeter and the INOmax DS_{IR} Plus communicate using two-way infrared (IR). The INOmeter sends the INOMAX cylinder concentration and expiration date to the INOmax DS_{IR} Plus. When patient information is entered, the INOmax DS_{IR} Plus sends the Patient data and dose information to the INOmeter.

WARNING

Do not remove the INOmeter. Removing the INOmeter can cause the system to stop delivery. If there is a problem with the INOmeter, contact Customer Support for additional information (see back cover). INOmeter battery replacement is only to be performed by the manufacturer.

To use the INOmeter:

1. Pull up the tamper-proof seal to remove it. Then properly dispose of it (Figure 3-17).

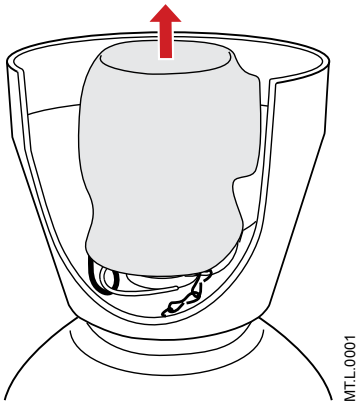

Figure 3-17 Seal on INOmeter

Removing the seal reveals the lock secured to the INOMAX cylinder by a lanyard (Figure 3-18).

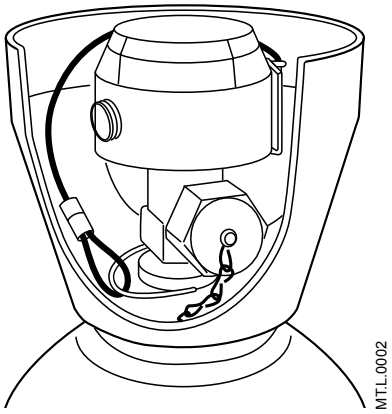

Figure 3-18 INOmeter, seal removed

2. Push the lock down to remove it from the INOmeter (Figure 3-19).

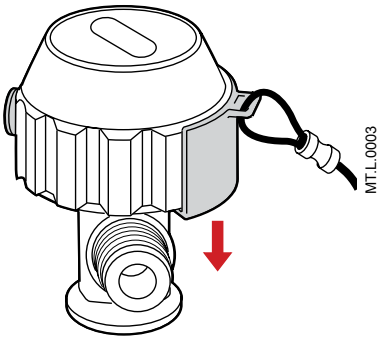

Figure 3-19 Removing lock from INOmeter

NOTE: To re-attach the lock, follow these steps.

a. Close the cylinder valve.

b. Remove the regulator.

c. Align the lock directly across from the ibutton.

d. Push the lock upward into the socket on the underside of the INOmeter (Figure 3-20).

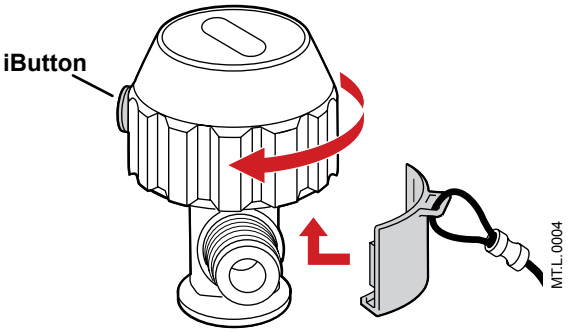

Figure 3-20 Attaching lock to INOmeter

When the cylinder valve is open the display (see Figure 3-21) alternates between:

- Valve Open Time: The length of time (in hours) since the valve was opened. This number appears for 8 seconds.
- Cumulative Time: The total number of hours since the INOMAX cylinder was first used. This number appears for 4 seconds.

If the display is blank, replace the INOMAX cylinder.

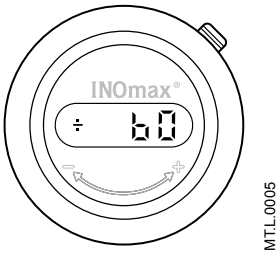

Figure 3-21 INOmeter Display

When the INOMAX cylinder valve is open, the **Main screen** shows the cylinder handle as green (see arrow, Figure 3-22).

When two INOMAX cylinders are loaded onto the Cart, both INOMAX cylinder images should appear on the user screen. If only one cylinder appears, see *Avoiding Infrared Interference, under Section 1.5.6*.

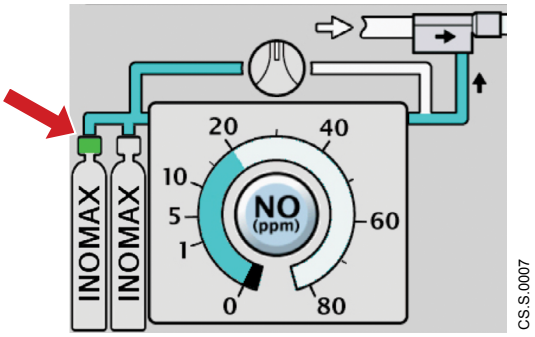

Figure 3-22 Portion of Main Screen showing cylinder valve open

NOTE: To close the INOMAX cylinder turn the valve clockwise.

When the valve is closed, the display alternates between:

- Four dashes (- - - -) indicate that the INOmeter is turned off (Figure 3-23). This appears for 8 seconds.
- The total number of hours since the INOMAX cylinder was first used. This number appears for 4 seconds.

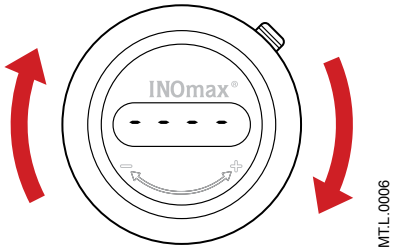

Figure 3-23 INOmeter Display while OFF (cylinder valve closed)

3.3.3 Using the INOblender

Read the *INOblender Operation and Maintenance Manual* before using the INOblender as a manual backup. Follow instructions and obey all Warnings and Cautions.

WARNINGS

Squeeze the manual resuscitator to purge NO_2 prior to connecting it to the patient.

Remove manual resuscitator from patient when not in use, to avoid NO_2 accumulation.

Do not use pneumatically powered nebulizers with the INOblender. This will result in additional back-pressure generated by pneumatic nebulizers, which will cause inaccurate delivery of the INOMAX dose.

CAUTION

The INOblender flowmeter is not back-pressure compensated and will display a lower-than-actual flow rate when pressure is applied to the outlet.

Some clinical conditions require an O_2 /air blender used with the INOblender to achieve FiO_2 levels less than 100%:

- Using 100% O_2 at 3.5 bar (50 psig) is the labeled specification for the INOblender. The specification for INOMAX delivery when using the INOblender with 100% O_2 is +/- 20% of setting or 2 ppm (whichever is greater).
- Using O_2/air mixtures (21% to 95% v/v) reduces the delivered NO concentration by up to 10% of setting or 1 ppm (whichever is greater) compared to using 100% O_2 alone, resulting in a cumulative error up to +/- 30% of setting or 3 ppm (whichever is greater).

CAUTION

Make sure that the INOblender is always upright to accurately display the O_2 flow rate.

The cylinder supplies INOMAX to the INOmax DS_{IR} Plus and then to the INOblender (see Figure 3-24).

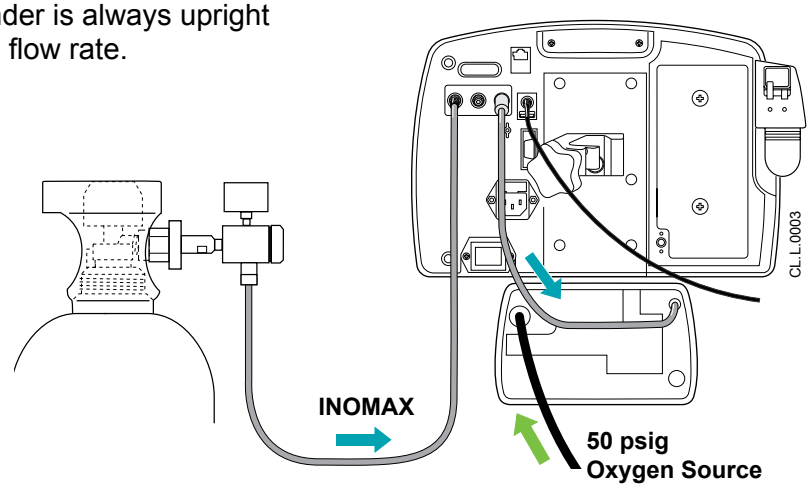

Figure 3-24 INOblender connections

To use the INOblender, refer to Figure 3-25 and continue with the following steps:

1. Connect the resuscitator bag to the O_2+NO outlet on the front of the INOblender.
2. Set an INOMAX dose between 5-80 ppm.
3. Set an oxygen flow rate between 5-14 L/min using the INOblender flowmeter.
4. Always squeeze the manual resuscitator prior to use.

Figure 3-25 Using the INOblender with manual resuscitator

3.3.3.1 Using the INOblender as a Stand-alone Backup Device

To disconnect the INOblender from the INOmax DS_{IR} Plus and use it as a backup stand-alone device refer to Figure 3-26 and do the following:

1. Verify the INOMAX cylinder is closed.
2. At the back of the INOmax DS_{IR} Plus, at the INOMAX gas inlet, push the knurled sleeve of the regulator hose toward the back of the INOmax DS_{IR} Plus until the hose disengages and disconnect the regulator hose (**1**).
3. Slide-back the Quick-Connect cover (**2**).
4. Connect the regulator hose to the INOblender inlet hose (**3**). Slide the quick-Connect cover back into place (**4**). If an extension hose is required see *Section 4.3.4, Connecting an INOMAX Regulator Extension Hose*.
5. Ensure the 3.5 bar (50 psig) O_2 hose is connected from the INOblender to an O_2 source (**5**).
6. Perform an INOblender Stand-alone Pre-Use Checkout. Refer to *Section 3.3.3.2 Using the INOblender Stand-alone Pre-use Checkout Procedure*.

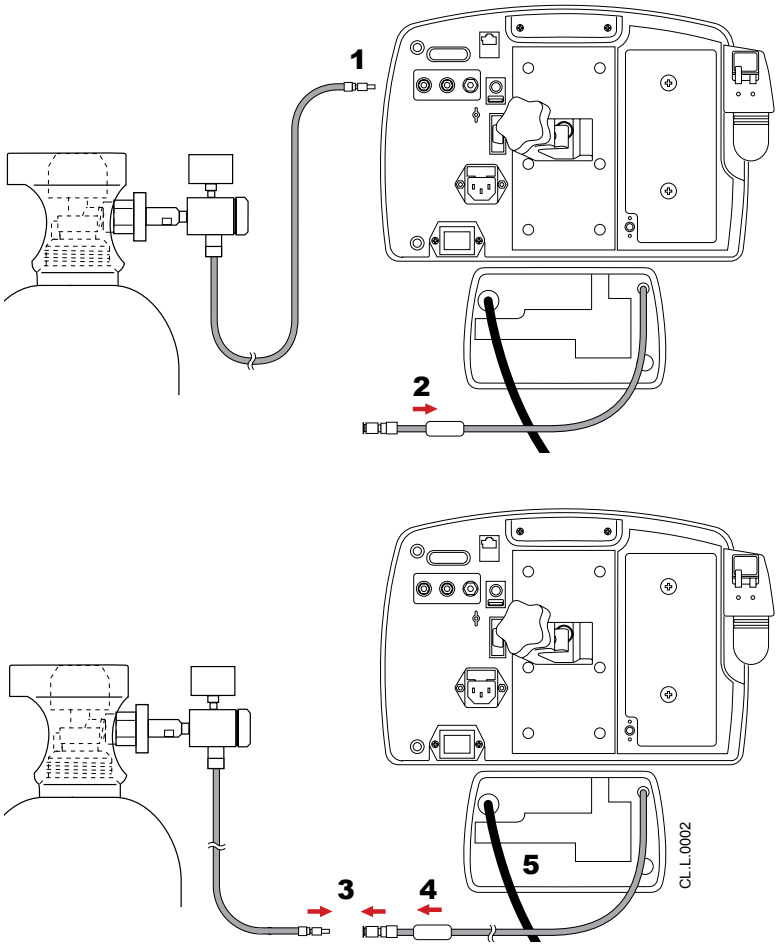

Figure 3-26 Connecting the INOblender for stand-alone use

3.3.3.2 Using the INOblender Stand-alone Pre-use Checkout Procedure

Before using INOblender as a stand-alone device, follow the INOblender pre-use checkout procedure.

WARNING

Do not start INOMAX drug delivery if the cylinder pressure is less than 34.5 bar (500 psig). Replace the INOMAX cylinder if pressure is less than 13.8 bar (200 psig). Using an INOMAX cylinder with low pressure can cause drug delivery to stop should the cylinder become depleted.

1. Make sure that the white plastic tip on the regulator is in place and is not chipped or cracked (Figure 3-27).

   NOTE: If the tip is damaged, the regulator must be replaced. Contact Customer Service to arrange for a replacement.

2. Confirm that one of the high pressure regulators is securely connected to an INOMAX cylinder.
3. At the connection between the cylinder and high pressure regulator, rotate the handle clockwise to fully tighten. Hand tighten only.
4. Connect the INOblender O_2 hose to a 3.5 bar (50 psig) O_2 source.
5. Make sure that the INOblender flowmeter and the Integrated Pneumatic Backup are turned off.

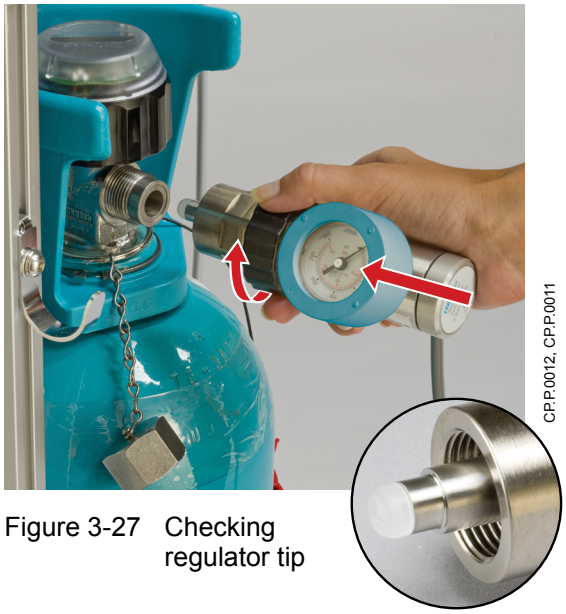

Figure 3-27 Checking regulator tip

6. Rotate the INOMAX cylinder valve handle at the top of the cylinder counter-clockwise until resistance to further movement is felt, indicating the valve is fully opened. (Figure 3-28).
7. Turn the cylinder valve handle clockwise to fully close the INOMAX cylinder valve.

   When the cylinder valve is closed, the INOmeter displays dashes (see Figure 3-23).

8. On the pressure gauge, verify that the INOMAX cylinder has at least 34.5 bar (500 psig).
9. Monitor the pressure gauge for 30 seconds to see whether pressure decreases.
   - If the pressure remains the same, the high pressure leak test is successful.
   - If the pressure decreases, follow the procedure in *Section 6.3 Detecting NO Gas Leaks*.

Figure 3-28 Rotating cylinder handle

WARNING

Do not use the INOblender unless the INOMAX cylinder and regulator have been purged. Purging the pressure regulator, INOblender and hoses minimizes NO_2 exposure.

Refer to Figure 3-29 and continue with the following steps:

10. Performance Test: With the cylinder valve closed, set the dose to 40 ppm (**1**).
11. Set the O_2 flow to 10 L/min (**2**).

    The pressure gauge will decrease approximately 13.8 bar (200 psig) in 10 seconds (+ 2 sec.) (**3**).

    Wait until the pressure gauge reads zero (**4**). This purges the INOblender and regulator.

NOTE: If the pressure does not decrease, then the INOblender is not delivering NO and needs replacement.

The INOblender is now ready for use.

Figure 3-29 Modifying O_2 flow and monitoring the pressure gauge

3.3.3.3 Using the INOblender with the NeoPuff™ Infant Resuscitator

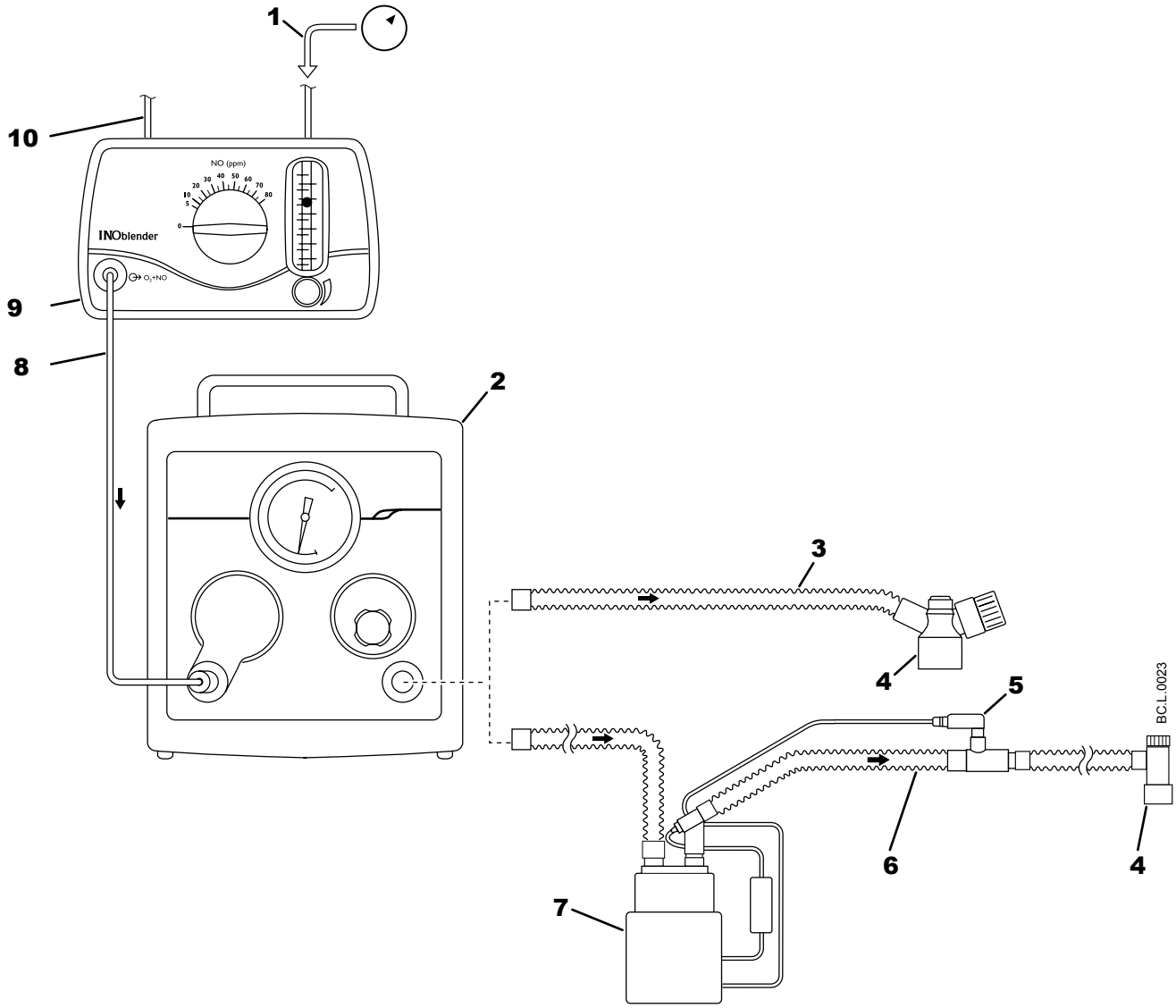

1. 50 psig Oxygen Source
2. Neopuff
3. T-Piece Circuit (with Duckbill Port)
4. Patient Connection
5. Temperature Probe
6. Humidified Resuscitation System Circuit
7. Humidifier
8. Oxygen Tubing
9. INOblender
10. INOMAX Inlet

Figure 3-30 INOblender with NeoPuff Infant Resuscitator circuit diagram

3.3.4 Integrated Pneumatic Backup

If the main delivery system of the INOmax DS_{IR} Plus fails, the Integrated Pneumatic Backup can be switched on to continue NO delivery, and allow the patient to remain connected to the gas delivery system. Integrated pneumatic backup NO delivery does not rely on the operation of the main system.

Integrated Pneumatic Backup:

- Uses an ON/OFF switch and a restrictor built into the delivery side of the system.
- Provides a fixed flow of 250 mL/min of 800 ppm INOMAX into the Injector Module.
- Includes a low priority alarm that sounds if the pneumatic backup system is turned on.

NOTE: Use Integrated Pneumatic Backup only for a short time, until a replacement delivery system can be obtained. The INOblender can also be used as a manual backup.

WARNINGS

Do not use the Integrated Pneumatic Backup with the Bunnell Life Pulse ventilator because with low servo pressures, flow rates can be below 2 L/min, resulting in delivered INOMAX doses greater than 80 ppm.

Do not use the Integrated Pneumatic Backup with breathing circuit gas flows less than 5 L/min, as the delivered INOMAX dose will be greater than 40 ppm.

To use Integrated Pneumatic Backup:

1. At the lower right of the INOmax DS_{IR} Plus, turn the Integrated Pneumatic Backup switch clockwise to the ON (250 mL/min) position (Figure 3-31).

   NOTE: The NO high and low alarm set points are automatically set to 90 ppm and 5 ppm, respectively.

Figure 3-31 Integrated Pneumatic Backup switched ON

Integrated Pneumatic Backup is reflected on the **Main screen.** As shown in Figure 3-32, the changes include:

- The bottom right portion of the screen is titled "**Backup On**" (**1**).
- Patient dose is marked by a triangular pointer on the **Estimated Backup Dose** graph (**2**).

  NOTE: The dose is calculated from the circuit flow measured by the Injector Module.
- Estimated NO dose table (**3**). This is shown more clearly in the table below.
- The set dose (**4**) is deactivated (turned off).
- INOMAX flow through the Pneumatic Backup system is shown, and the switch is ON (**5**).

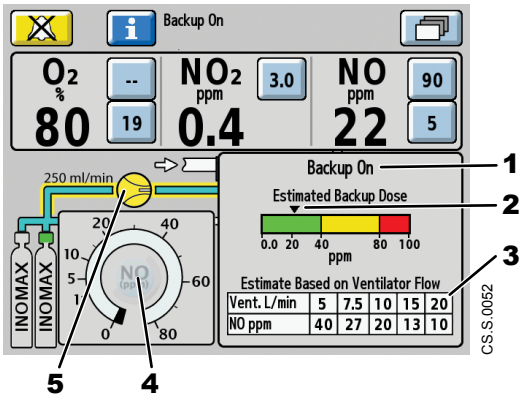

Figure 3-32 Main screen showing Backup ON

NOTES:

- The **Estimated Pneumatic Backup Dose graph** will be inactive (greyed-out) if the Injector Module is not functioning.
- If there is a cylinder concentration mismatch the **Estimated Pneumatic Backup Dose graph** will be inactive (greyed-out) and the Estimated Dose table will not display.

Table 3-1 Backup Mode NO Concentration

Nominal NO concentrations delivered for different gas delivery system flows						
Gas Delivery System Flow	(L/min)	5	7.5	10	15	20
NO Concentration	(ppm)	40	27	20	13	10

The integrated pneumatic backup system provides a fixed flow of 250 mL/min of 800 ppm INOMAX into the Injector Module. This fixed flow provides 20 ppm of NO when added to a continuous gas delivery system flow of 10 L/min (Table 3-1).

2. To turn Integrated Pneumatic Backup OFF, turn the Integrated Pneumatic Backup switch counter-clockwise to the off position (Figure 3-33).

   The dose and alarm settings return to their previous set points.

3. Select the **EXIT button** to remove the **Backup Off display** and to return to the **Main screen**.

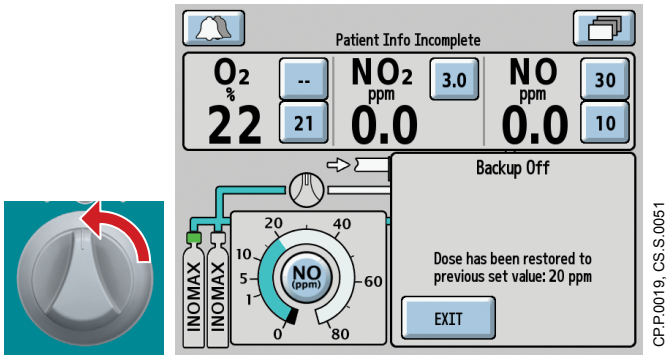

Figure 3-33 Integrated Pneumatic Backup OFF

3.3.5 Connecting to Gas Delivery Systems

This section provides diagrams for connecting the INOmax DS_{IR} to four universal types of gas delivery:

- Conventional Ventilator Circuit
- Circle Anesthesia Circuit
- Spontaneous Breathing Patient on a Mask
- Spontaneous Breathing Patient on a Nasal Cannula

For transport set up diagrams, Refer to *Chapter 4 Using the INOmax DS_{IR} Plus During Transport*.

Diagrams for circuits with specific-model gas delivery systems are provided in *Appendix C - Gas Delivery Systems Validated for Use in the U.S.* **and** *Appendix D - Gas Delivery Systems Used Outside the U.S.*

NOTE: Connections to gas delivery systems and their corresponding disposable circuits are unique to each manufacturer.

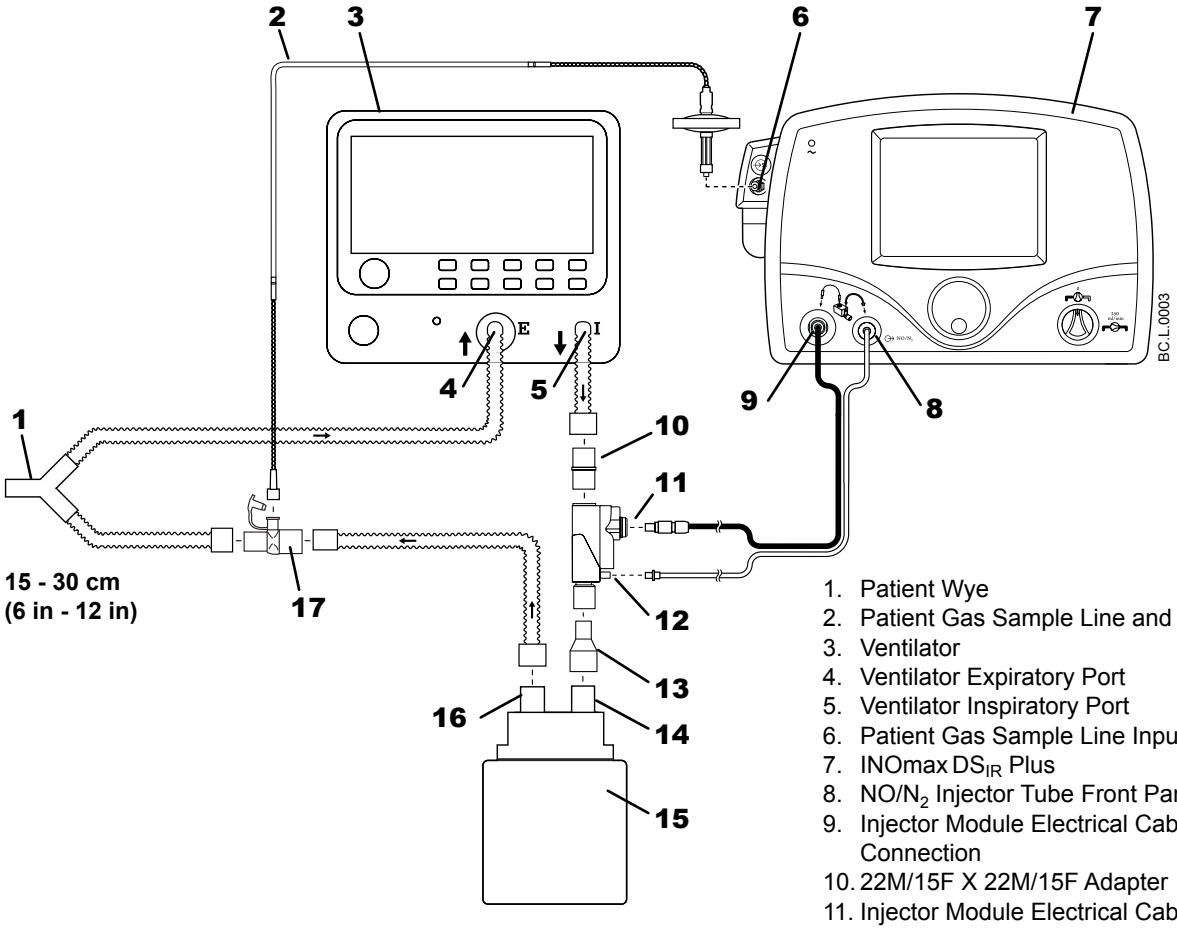

1. Patient Wye
2. Patient Gas Sample Line and Filter
3. Ventilator
4. Ventilator Expiratory Port
5. Ventilator Inspiratory Port
6. Patient Gas Sample Line Input Connection
7. INOmax DS_{IR} Plus
8. NO/N_2 Injector Tube Front Panel Connection
9. Injector Module Electrical Cable Front Panel Connection
10. 22M/15F X 22M/15F Adapter
11. Injector Module Electrical Cable Connection
12. Injector Module NO/N_2 Injector Tube Connection
13. 22F X 15M Adapter
14. Humidifier Inlet
15. Humidifier
16. Humidifier Outlet
17. Gas Sample Tee

Figure 3-34 Circuit diagram of a Gas Delivery System

3.3.5.1 Circle Anesthesia System

WARNING

Avoid recirculation of gases, which occurs if fresh gas flows are less than the patient minute volume. Recirculation of gases can result in:

- **Higher NO_2 levels, due to the limited ability of the carbon dioxide absorbent to remove NO_2.**
- **Higher than set NO concentration, due to NO recirculated through the absorber.**
- **Reduction in O_2 concentration, because nitrogen is the balance gas for nitric oxide and will be present in the re-circulated gases.**

Always maintain fresh gas flow greater than the patient's minute volume.

CAUTION

Anesthesia gas can affect the INOmax DS_{IR} Plus monitoring system:

- Verify the airflow direction arrow on the Injector Module. The flow from the absorber must pass through the Injector Module in the direction of the arrow on the module.
- Nitrous Oxide (N_2O) affects the set NO versus the measured NO value. For a 50% N_2O, 50% O_2 composition, the measured NO value will be approximately 7% less than the same set NO value at 100% O_2. For example, at a set NO value of 20 ppm, measured NO will be approximately 18 ppm.
- The effect of 2% v/v Isoflurane results in a high measured NO value of approximately 3% indicated for the same set NO value at 100% O_2.
- Sudden changes in anesthetic agent concentration can cause transient changes in the measured NO and NO_2 values.

For OR ventilation systems with the inspiratory flow measurements at the inspiratory port of the absorber, place the Injector Module upstream of the inspiratory flow sensor (not shown in Figure 3-35).

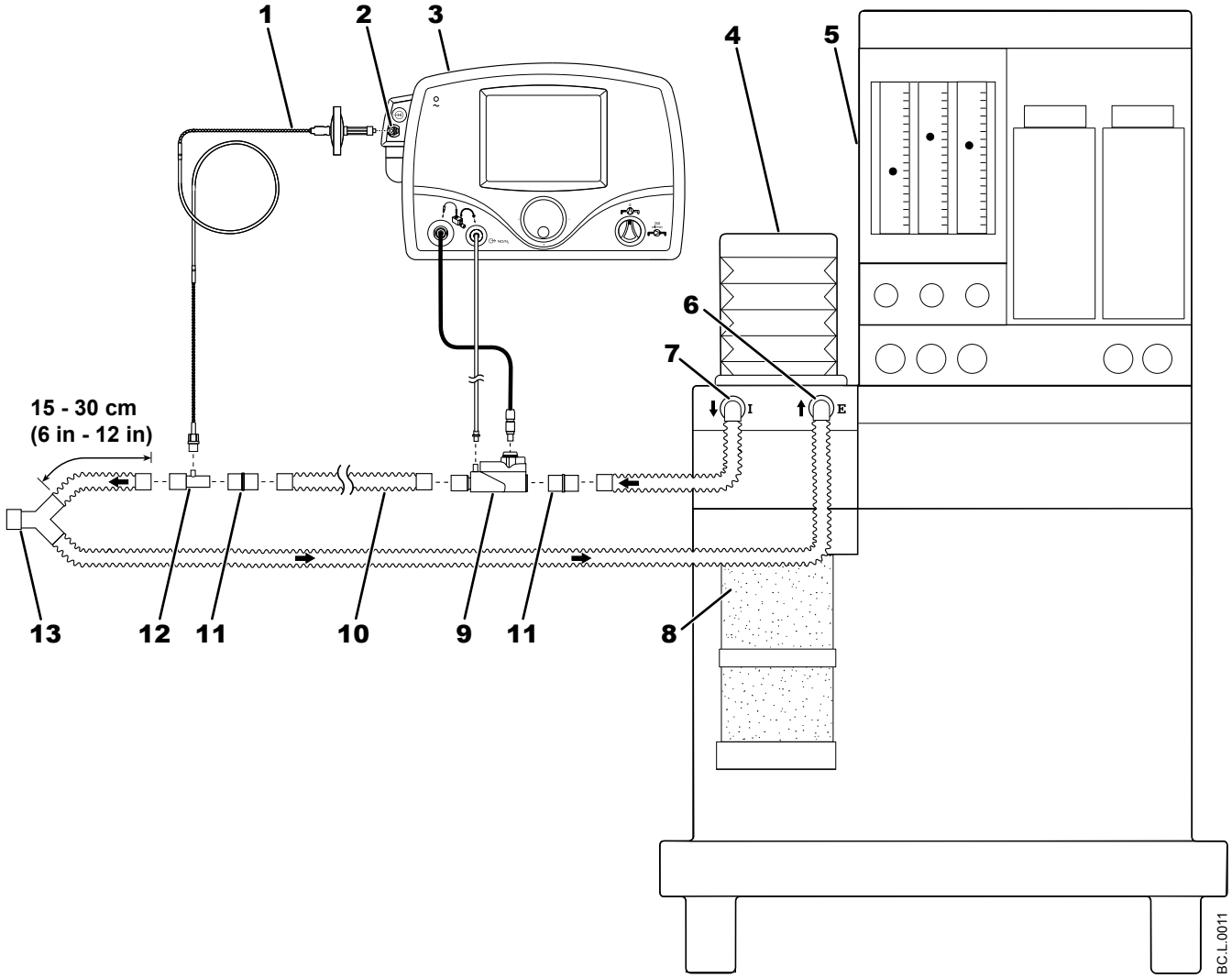

1. Patient Gas Sample Line and Filter
2. Patient Gas Sample Line Input Connection
3. INOmax DS_{IR} Plus
4. Bellows Assembly
5. Ventilator
6. Expiratory Port
7. Inspiratory Port
8. Absorber
9. Injector Module
10. Inspiratory Tubing
11. 22M/15F X 22M/15F Adapter (2)
12. Gas Sample Tee
13. Patient Wye

Figure 3-35 Circuit diagram of a Circle Anesthesia System

3.3.5.2 Spontaneous Breathing Patient on a Mask

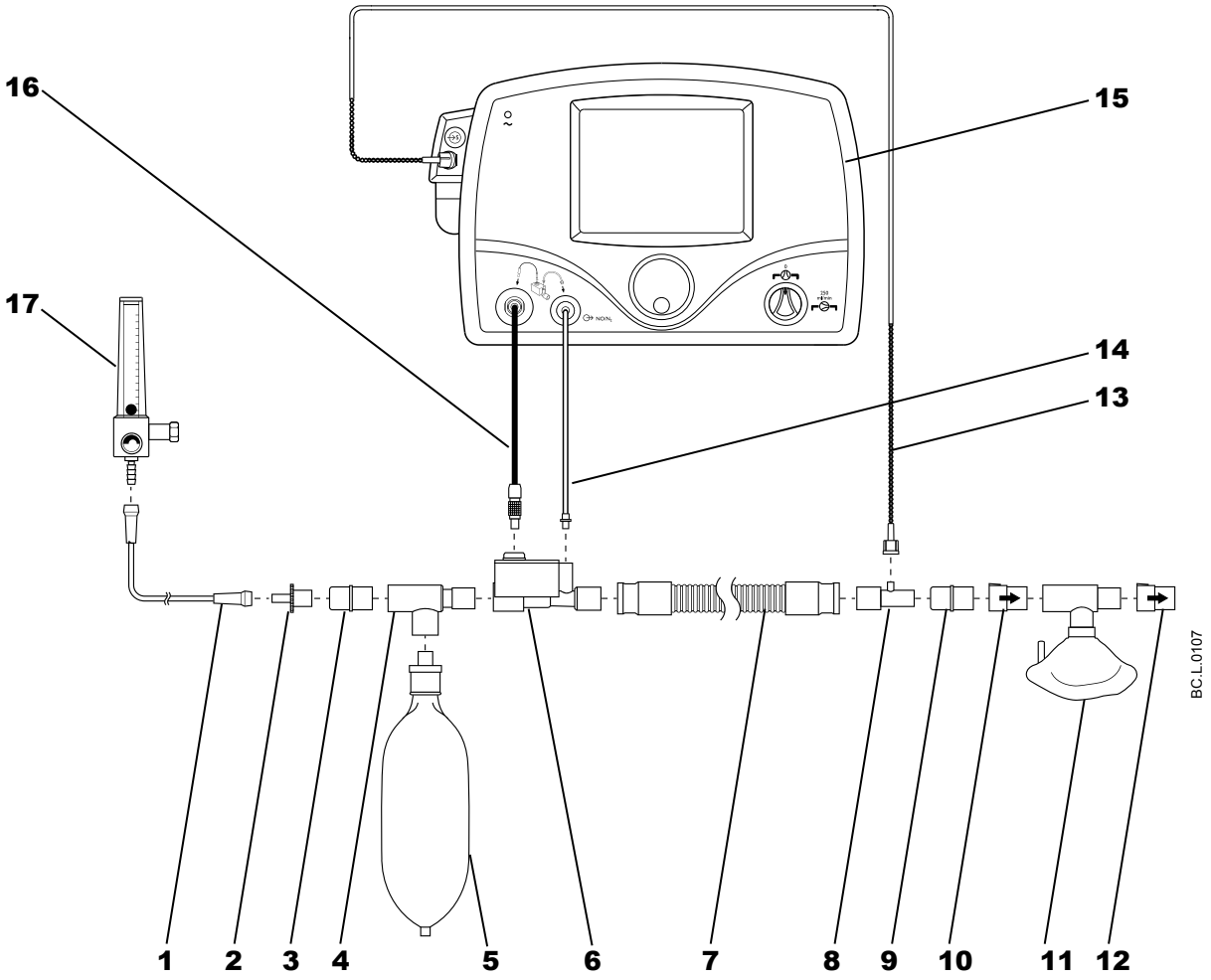

1. O_2 Tubing
2. 15M X 4.5 mm Adapter
3. 22M/15F X 22M/15F Adapter
4. Breathing Circuit Tee
5. Breathing Circuit Bag
6. Injector Module
7. Breathing Circuit Hose
8. Gas Sample Tee
9. 22M/15F X 22M/15F Adapter
10. One-Way Valve
11. Sealed Face Mask
12. One-Way Valve
13. Patient Gas Sample Line with Nafion
14. NO/N_2 Injector Tube
15. INOmax DS_{IR} Plus
16. Injector Module Electrical Cable
17. O_2 Flowmeter (wall outlet or cylinder)

Figure 3-36 Circuit diagram of a “spontaneous breathing patient on a mask” system

3.3.5.3 Spontaneous Breathing Patient on a Nasal Cannula

The INOmax DS_{IR} Plus can be used with nasal cannula to deliver INOMAX concentrations from 5-80 ppm and an oxygen flow rate as low as 2 L/min.

Conditioning of the oxygen flow prior to delivery through the Injector Module ensures the most accurate flow measurement. Conditioning can be achieved by adding 300 mm of 22 mm hose between the oxygen tubing and the Injector Module (**10**, Figure 3-37).

WARNING

Do not use the Integrated Pneumatic Backup with breathing circuit gas flows less than 5 L/min, as the delivered INOMAX dose will be greater than 40 ppm.

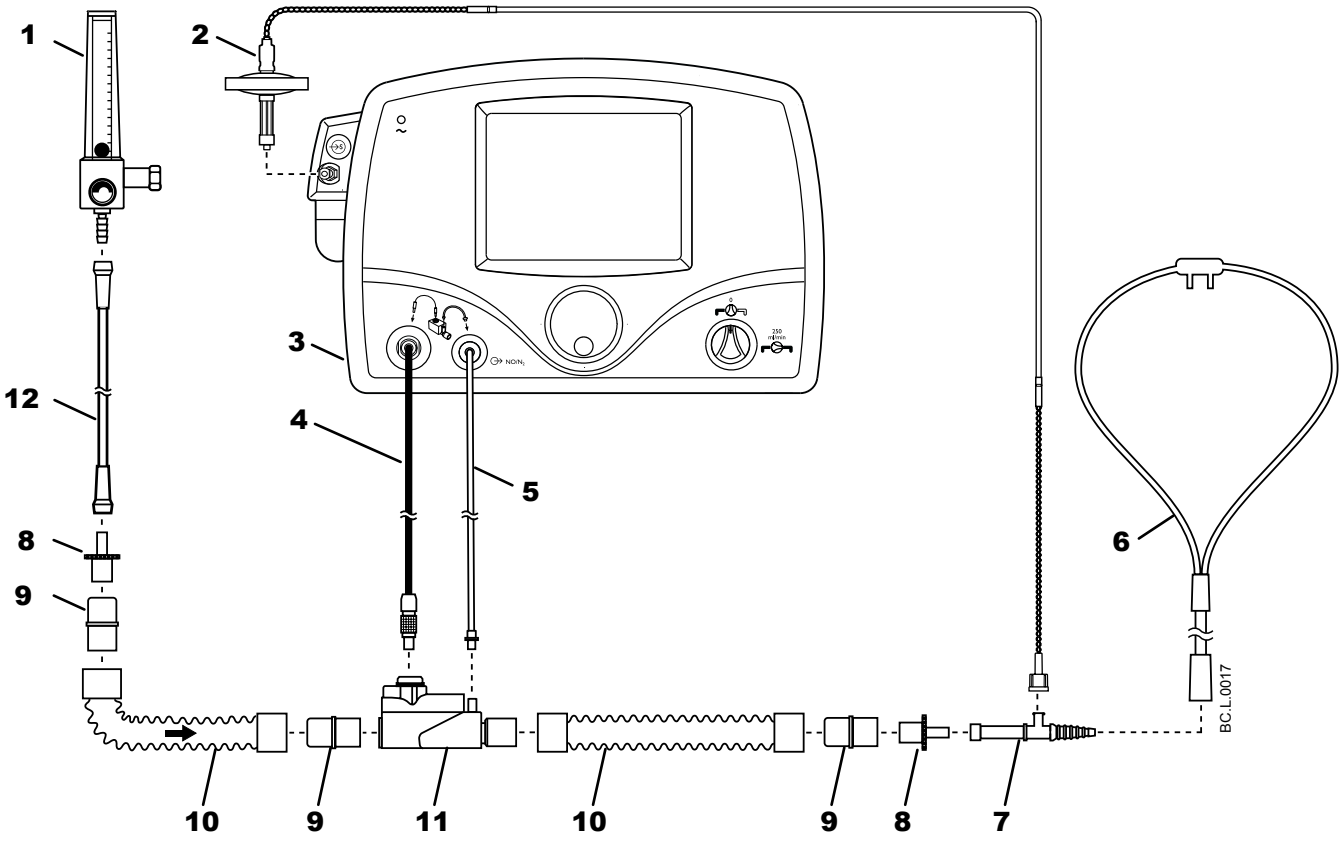

1. O_2 Flowmeter (Wall Outlet or Cylinder)
2. Patient Gas Sample Line and Filter
3. INOmax DS_{IR} Plus
4. Injector Module Electrical Cable
5. NO/N2 Injector Tube
6. Patient Nasal Cannula
7. O_2 Tubing Sample Tee
8. 15M x 4.5 mm Adapter (2)
9. 22M/15F x 22M/15F Adapter (3)
10. 300 mm of 22 mm Hose (2)
11. Injector Module
12. O_2 Tubing

Figure 3-37 Circuit Diagram of a “spontaneous breathing patient on a nasal cannula” system

3.4 Using the INOmax DS_{IR} Plus

This section provides instructions for entering patient information (*3.4.1),* sampling inspired gas during aerosol delivery (*3.4.2*) and monitoring environmental levels of NO and NO_2 (*3.4.3*).

3.4.1 Entering Patient Information

A patient identifier and patient details may be entered when the INOmax DS_{IR} Plus is ready for use, or during treatment. When patient information is entered, it is stored in the INOmax DS_{IR} Plus and in the INOmeter.

NOTE: Do not use identifiers traceable to a specific patient. Consult and comply with your internal hospital HIPAA guidelines when entering a patient identifier.To enter patient information:

1. At the lower right corner of the **Main screen** (Figure 3-38), select the **Patient Info button**.

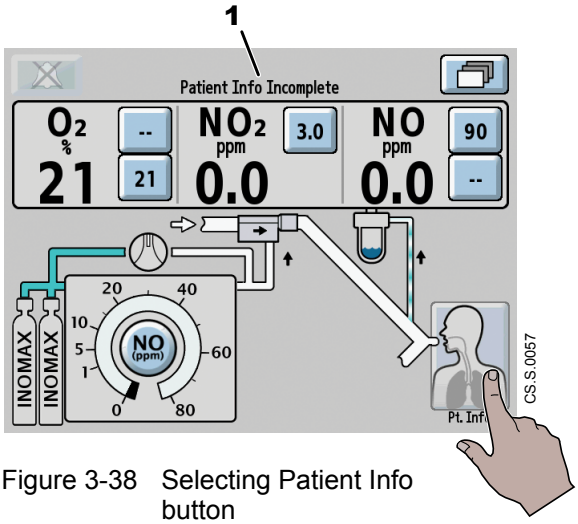

Figure 3-38 Selecting Patient Info button

2. If a patient identifier has not been entered, the **"Patient Info Incomplete" message** remains at the top of the **Main screen** (**1**, Figure 3-38). At the next screen, select the **Enter Patient Identifier button** (Figure 3-39).

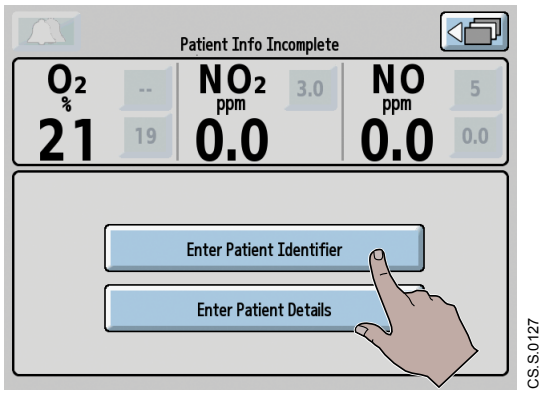

Figure 3-39 Selecting Enter Patient Identifier button

3. When the keyboard appears (Figure 3-40), enter the patient identifier of 6 to 8 alphanumeric characters, including spaces.

   Once 6 characters are entered, the **CONFIRM button** will become active.

4. Select the **CONFIRM button**.

   The patient identifier cannot be changed unless the device is turned to Standby.

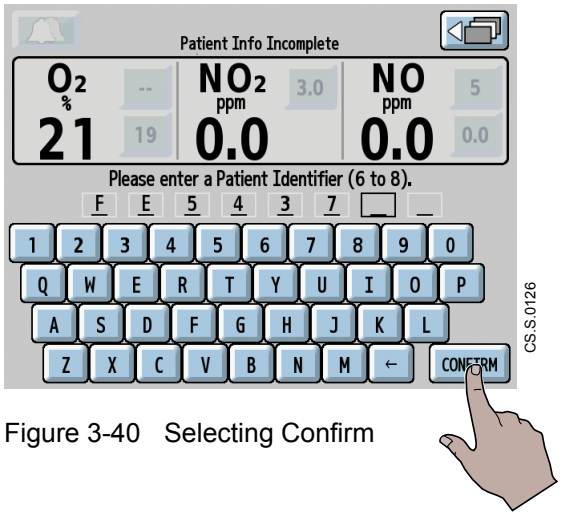

Figure 3-40 Selecting Confirm

5. At the next screen (Figure 3-41), select **Select Patient Type** and rotate the control wheel to select **Neonate**, **Pediatric**, or **Adult**.
6. Press the Control Wheel or select the button again to select your choice.

   Once the patient type is confirmed, the **Select Diagnosis button** appears.

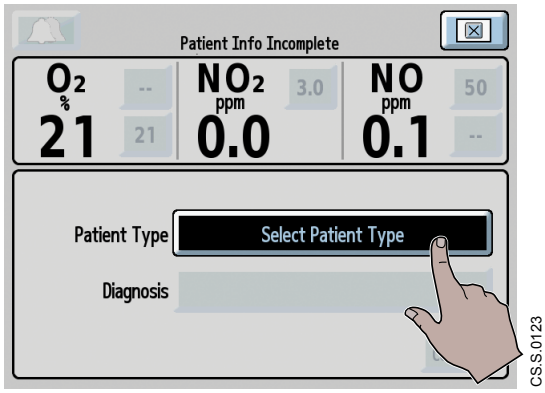

Figure 3-41 Selecting Select Patient Type

7. Touch **Select Diagnosis** (Figure 3-42) and rotate the Control Wheel to configure the patient diagnosis.

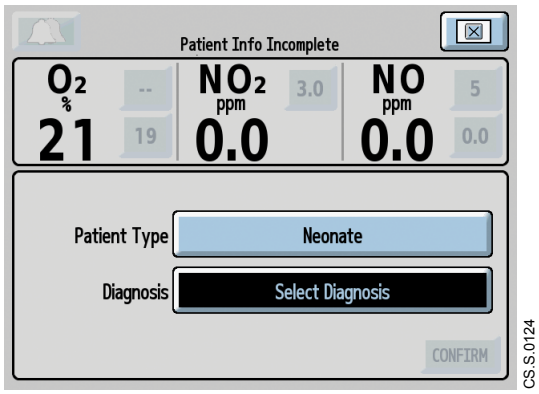

Figure 3-42 Diagnosis button selected

8. Press the Control Wheel or select the button again to select your choice.
9. Select the **CONFIRM button** (Figure 3-43).
10. If **Neonate** was selected, enter the patient's:
    a. **Gestational Age At Birth:** in weeks.
    b. **Weight At Birth** in grams.

    Use the row of numbered buttons to fill the Age and Weight fields (Figure 3-44). A digit can be changed by using the backspace key, (**1**) or by touching the number already entered in the field, and then selecting a new number from the row of numbered buttons.

    The **CONFIRM button** (**2**) will illuminate when age and weight have been entered.

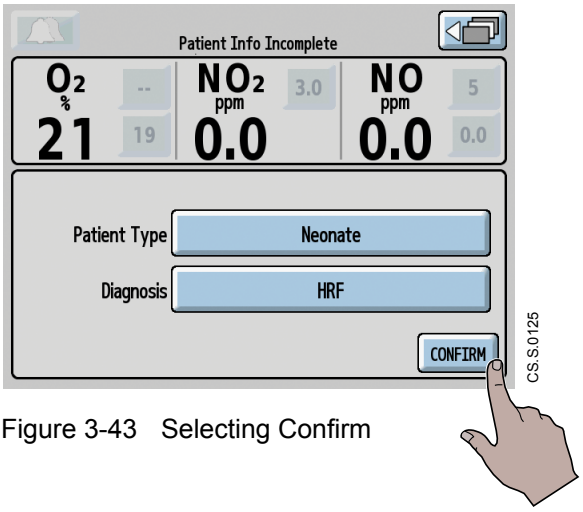

Figure 3-43 Selecting Confirm

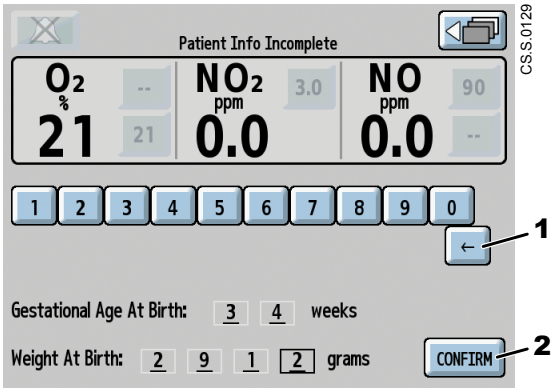

Figure 3-44 Patient Info Screen

11. Select the **CONFIRM button**.

    Once all of the information is entered, if the **Patient Info button** on the **Main screen** is selected, the screen displays the identifier and patient details (Figure 3-45).
12. Select the **EXIT button**.

NOTE: If both the patient identifier and patient details are not entered, **"Pt. Info Incomplete"** will remain on the **Main screen** until both are entered.

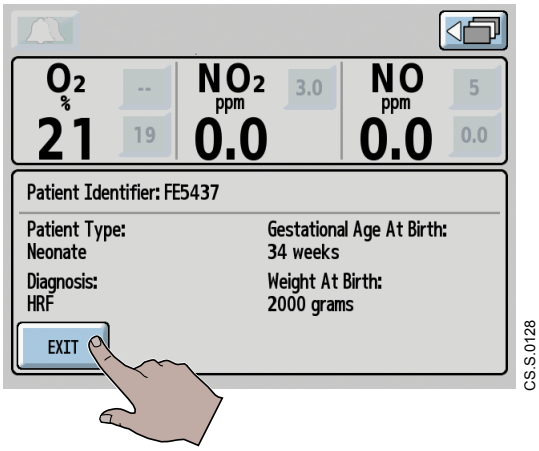

Figure 3-45 Selecting EXIT button

Inspired Gas Sampling During Aerosol Delivery

CAUTION

Pneumatic nebulizers will dilute the delivered INOMAX dose.

To sample inspired gas during aerosol delivery:

1. Place the medication nebulizer downstream of the Gas Sample Tee on the inspiratory limb (see Figure 3-46).

   This avoids over-saturation of the water separator cartridge, or contamination of the sample system. In addition, it prevents the **Sample Line/Filter Block alarm** from occurring.

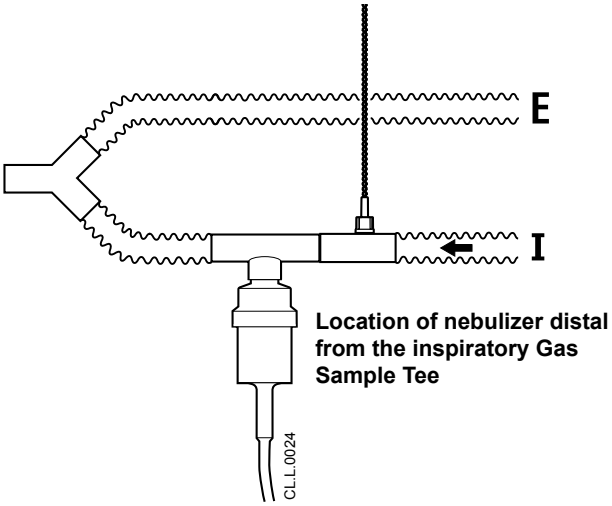

Figure 3-46 Diagram of breathing circuit section, showing nebulizer placement

NOTES:

- Change the Patient Gas Sample Line and Filter when necessary (due to **Sample Line/Filter Block alarm**). This reduces the replacement frequency of the water separator cartridge.
- Do not operate the INOmax DS_{IR} Plus without the water separator cartridge or water bottle.

For detailed information, refer to *Section 6 Maintaining the INOmax DS_{IR} Plus.*

3.4.2 Monitoring the Environment

The INOmax DS_{IR} Plus monitoring system can measure the environmental levels of NO and NO_2:

NOTE: If alarms occur during this procedure, contact Customer Support (see back cover).

1. Disconnect the Patient Gas Sample Line and Filter connector from the Gas Sample Tee (Figure 3-47).

Figure 3-47 Disconnecting Sample Line

2. Cap the Luer fitting on the Gas Sample Tee (Figure 3-48).

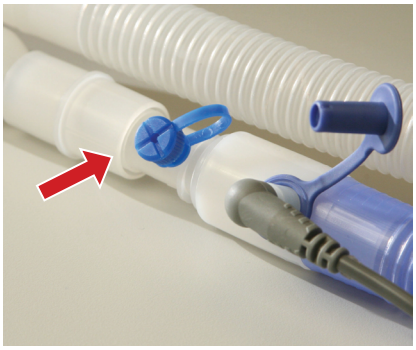

Figure 3-48 Luer fitting capped

WARNING

Cap the Gas Sample Tee if the Patient Gas Sample Line and Filter is removed from patient breathing circuit. This will help prevent breathing circuit pressure loss.

NOTE: Low O_2 or NO monitoring alarms may occur during this test.

3. Sample the room air with the Sample Line (Figure 3-49) and check the NO and NO_2 readings.
4. Remove the Luer fitting cap on the Gas Sample Tee and reconnect the Patient Gas Sample Line and Filter.

Figure 3-49 Patient Gas Sample Line and Filter connector

3.5 Acid Formation in the Humidifier or Breathing Circuit when Delivering INOMAX

A long term test was performed at Datex-Ohmeda to determine if acid would build up in a breathing circuit over time when delivering inhaled Nitric Oxide.

The test equipment was a Sechrist IV-100B neonatal ventilator and a Fisher Paykel MR500 humidifier. The ventilator settings were Rate 40 breaths per minute, Flow 6 L/min and Oxygen 100% v/v and the humidifier was set to 36 degree's C.

The pH level was measured at the humidifier (the water in the humidifier chamber), at the patient Y (the condensate in the breathing circuit) and at the exhalation valve back at the ventilator (the condensate in the breathing circuit).

For the test distilled water was used which had an initial pH of 5.75 and the pH was measured with Hydrion Paper (4.5 to 7.5).

A control test without NO being delivered was run initially to see if the pH would change over time due to the slightly acidic nature of distilled water. The control test was run for six days with no change in the pH at any of the test points.

The test was then repeated with 80 ppm of NO being delivered continuously for nine days with the pH being tested daily at each of the test points. There was no change of pH at any of the test points for any of the daily tests.

Mallinckrodt™ Pharmaceuticals

INOmax DS$_{IR}$® Plus

Using the INOmaxDS$_{IR}$ Plus During Transport

4/ Using the INOmax DS$_{IR}$ Plus During Transport

Part No. 21204 Rev-03
2024-06

Mallinckrodt™ Pharmaceuticals

INOmax DS$_{IR}$® Plus

Using the INOmaxDS$_{IR}$ Plus During Transport

4/ Using the INOmax DS$_{IR}$ Plus During Transport

Part No. 21204 Rev-03
2024-06

4 Using the INOmax DS_{IR} Plus During Transport

4.1 Introduction

The INOmax DS_{IR} Plus system can be adapted for use in transport applications. In most of these applications the Transport Regulator/Cap Assembly is used to mount the INOMAX transport cylinder away from the INOmax DS_{IR} Plus or INOblender.

A High Pressure Leak Test and purge are always required prior to use *(see Section 6.2 Changing INOMAX Cylinders)*. Therefore this chapter starts with connecting the Transport Regulator/Cap Assembly and doing the Automatic Pre-Use Checkout. The main sections that follow explain how to use the system in transport applications:

Section 4.2 Using the INOmax DS_{IR} Plus and Cart for Transport within the Hospital

Section 4.3 Using the INOmax DS_{IR} Plus and INOblender Detached from the Cart

Section 4.4 Using the INOblender for Transport as a Stand-alone Device

Section 4.5 Using a Separate INOmax DS_{IR} Plus for Transport

NOTE: Before transport, check the INOMAX cylinder for the correct product identity labels, INOMAX cylinder concentration and an expiration date several days prior to the last day of the expiration month.

WARNING:

Verify that there is enough INOMAX to last through the transport, including unexpected delays. Bring additional INOMAX cylinders as appropriate. Refer to *Appendix B, Duration and Dilution Charts***.**

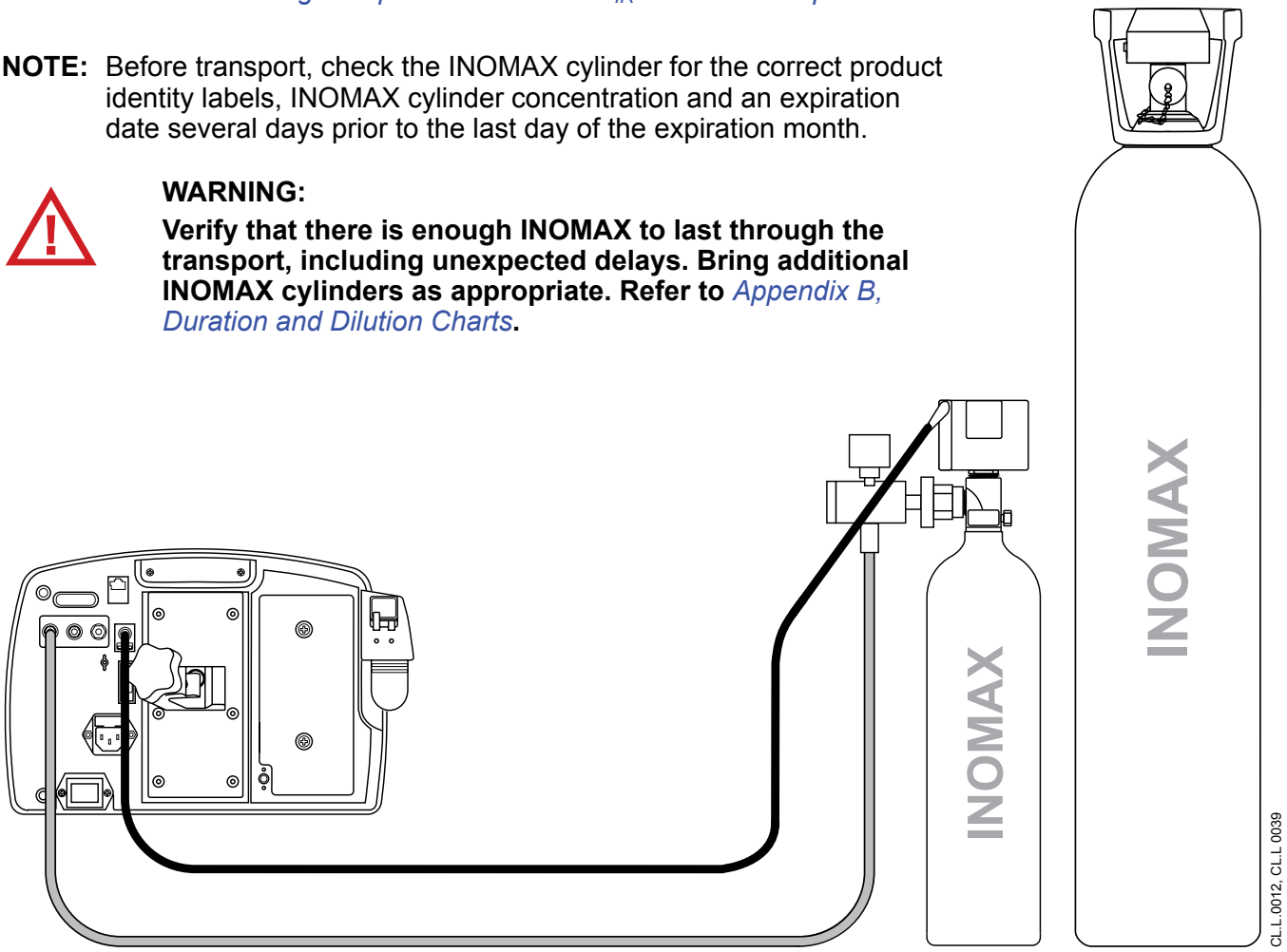

Figure 4-1 Transport setup (with a D-size cylinder) standing next to an 88 (full-size) cylinder
See page 4-2

4.1.1 Using the Transport Regulator/Cap Assembly

The Transport Regulator/Cap Assembly is used for transport. The gas hose and IR cable on the Assembly are 2.9 meters long (9.5 feet), allowing for remote transport cylinder mounting (see Figure 4-1).

To connect the Transport Regulator/Cap Assembly to the INOMAX transport cylinder:

1. Check the INOMAX transport cylinder for the correct product identity, cylinder concentration, and expiration date.
2. On the transport regulator, make sure that the white plastic tip is in place and not chipped or cracked (see **3**, Figure 4-2).

NOTE: If the tip is damaged, the Transport Regulator/Cap Assembly must be replaced. Contact Customer Service to arrange for a replacement.

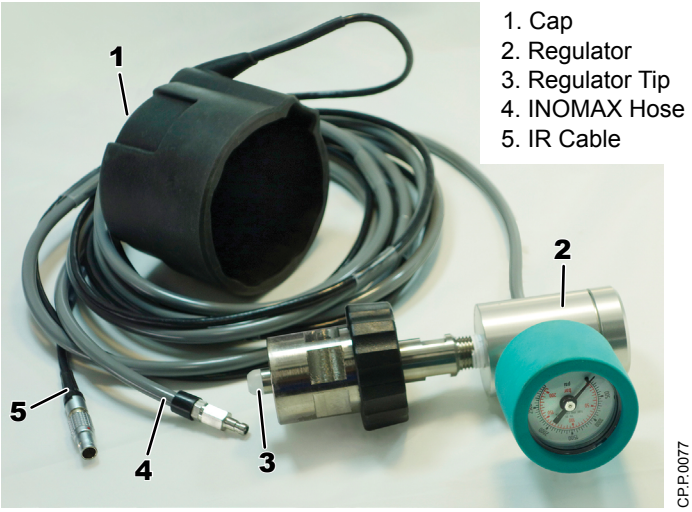

1. Cap
2. Regulator
3. Regulator Tip
4. INOMAX Hose
5. IR Cable

Figure 4-2 Transport Regulator/Cap Assembly

3. Connect the transport regulator to an INOMAX transport cylinder.
4. Turn the regulator handle clockwise to tighten the regulator.
5. Place the cap portion of the assembly over the INOmeter (Figure 4-3).

   Align the keyway inside the cap assembly with the iButton on the INOmeter. The electrical cord exits the cap directly above the iButton keyway.

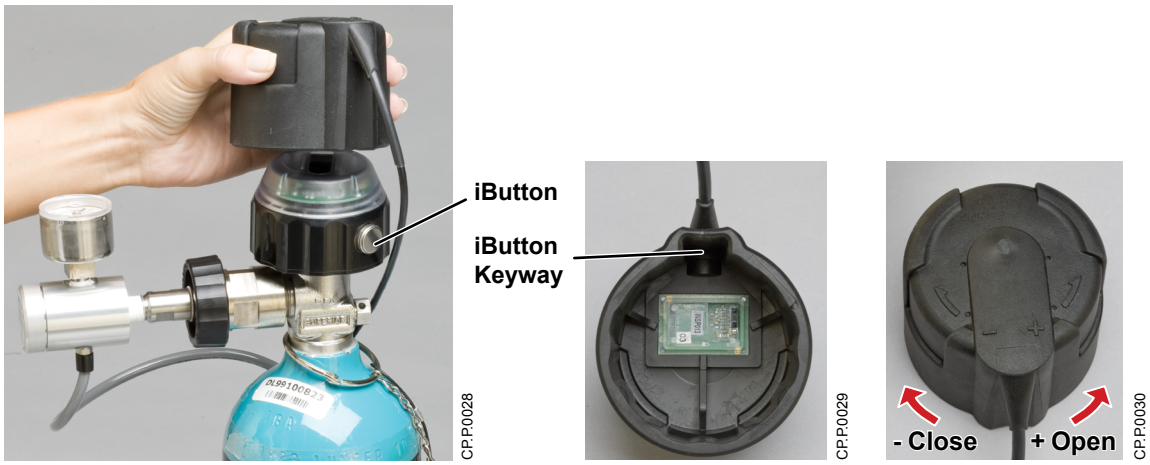

Figure 4-3 Views of the Transport Regulator/Cap Assembly

6. Connect the Transport Regulator/Cap Assembly gas hose to one of the inlets on the back of the INOmax DS_{IR} Plus.
7. Connect the infrared cable from the Transport Regulator/Cap Assembly to the back of the INOmax DS_{IR} Plus, being careful to line up the red markings on the plug and socket (see inset, Figure 4-4).

NOTES:

- Notice that the connector clicks to indicate that it is latched into place.
- If the INOmax DS_{IR} Plus is to be removed from the cart, you must disconnect the cart regulator (a **Cylinder Not Detected alarm** may occur).

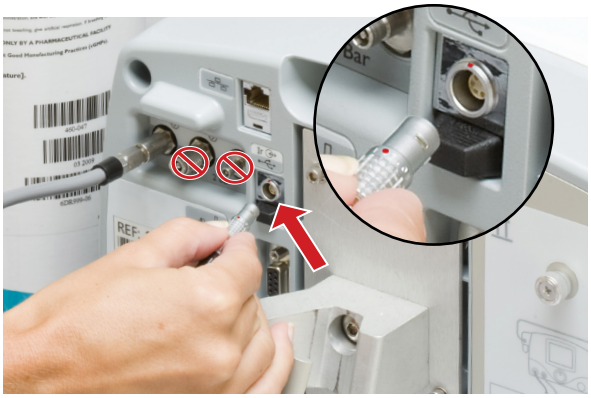

Figure 4-4 Connecting infrared cable

8. Complete the set up of the INOmax DS_{IR} Plus, and prepare it for delivery by using the *Automated Pre-Use Checkout wizard (see Section 3.2)*.

   Figure 4-5 shows all components connected.

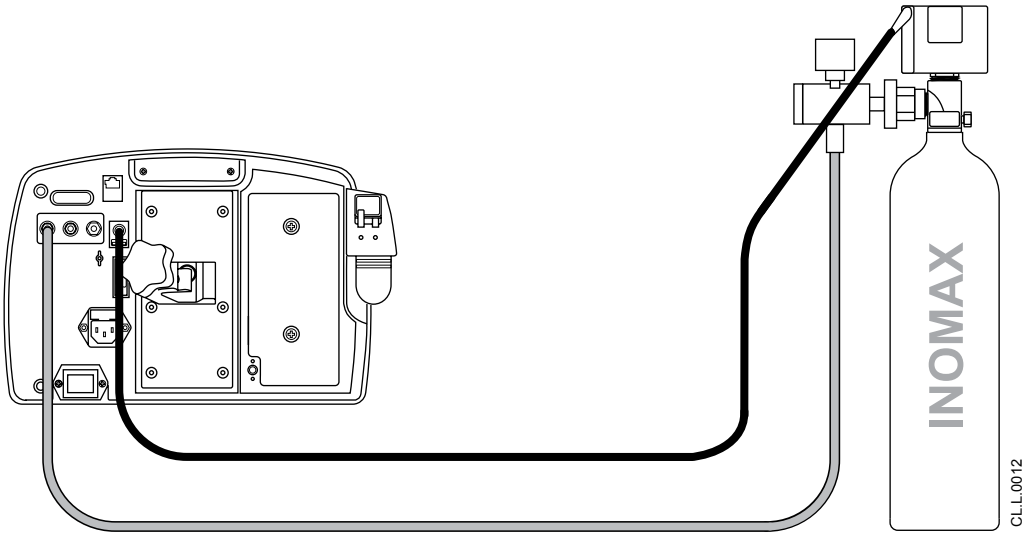

Figure 4-5 INOmax DS_{IR} Plus components connected for transport

4.2 Using the INOmax DS_{IR} Plus and Cart for Transport within the Hospital

This transport scenario only requires unplugging the INOmax DS_{IR} Plus power cord (at which time, the system automatically switches to battery back-up) and obtaining and connecting a portable O_2 cylinder.

WARNINGS:

Verify that there is enough INOMAX to last through the transport, including unexpected delays. Bring additional INOMAX cylinders as appropriate. Refer to *Appendix B, Duration and Dilution Charts***.**

Ensure the battery is fully charged prior to transport. Refer to *Section 4.6 Running on Battery Power***.**

1. Secure the O_2 cylinder to the back of the INOmax DS_{IR} Cart, *Refer to Figure 1-6 INOMAX cylinders*.
2. Connect the INOblender O_2 hose to a 3.5 bar (50 psig) portable O_2 source.
3. Unplug the power cord from the wall power source. Roll-up and secure the cord to avoid tripping hazard.
4. Manually ventilate the patient using the INOblender while configuring the INOmax DS_{IR} Plus to the transport ventilator.
5. When returned to the bedside:
   a. Manually ventilate the patient while reattaching the INOmax DS_{IR} Plus to the bedside ventilator.
   b. Check the **Main screen** to confirm that the INOmax DS_{IR} Plus is operating.
   c. Reconnect the INOblender oxygen hose to a 3.5 bar (50 psig) wall O_2 source.
   d. Reconnect the power cord to the wall power source and confirm the main power indicator light is ON.

4.3 Using the INOmax DS_{IR} Plus and INOblender Detached from the Cart

This section explains how to equip the transport incubator or gurney with the INOmax DS_{IR} Plus, INOblender and peripherals. Only the transport incubator is used in the examples below.

WARNING

If the INOmax DS_{IR} Plus or INOblender is used in a transport vehicle, the INOmax DS_{IR} Plus and INOblender should be securely attached to the transport incubator/ gurney. Secure each device to the Mounting Post, which is part of the Transport Mounting Bracket Assembly, to prevent possible injury.

4.3.1 Recommended Items to Have Available in Transport

Depending on the transport circumstances, it is advisable to include the following items. Having extra items on hand allows for backup when needed.

- INOmax DS_{IR} Plus
- INOblender
- Transport Regulator/Cap Assembly (2 each)
- D-size transport INOMAX cylinder (2 each)
- Injector Module (2 each)
- Injector Module cables (2 each)
- Transport Mounting Bracket Assembly (2 each)
- O_2 cylinder
- Disposables
  - NO/N2 Injector Tube (2 each)
  - Patient Gas Sample Line and Filter (2 each)
  - Water separator cartridge (2 each)

4.3.2 Assembling and Attaching the Transport Mounting Bracket to a Transport Incubator

The INOmax DS_{IR} Plus and the INOblender can be detached from the Cart and used for transport. It is strongly recommended that INOmax DS_{IR} Plus components be securely fixed to the transport incubator or gurney which will carry the patient.

The Transport Mounting Bracket (kit), with the included Mounting Post (assembly instructions below) provides a mechanism for attaching the INOmax DS_{IR} Plus and the INOblender to commonly used transport devices. The example which follows uses a transport incubator and two Transport Mounting Bracket Assemblies.

The Mounting Post has a machined recess with an integrated cap to help prevent twisting or accidental release of the device if the mounting clamp becomes loose.

A mounting bracket assembly will be required for each device.

CAUTION

The Transport Mounting Bracket is designed for attachment to a 33.3 mm to 34.9 mm (1 5/16″ to 1 3/8″) diameter rail (without spacers). If attaching to a 25.4 mm (1″) diameter rail, use the (2) spacers provided. Installation by a trained medical equipment specialist is recommended.

Assemble and attach two Transport Mounting Brackets onto the incubator handles as shown in Figures 4-6 and 4-7:

1. Hold the front and back brackets onto the incubator handle with the front bracket facing away from the incubator body. Install (4) 5/16″ screws and lock washers, and tighten using Allen wrench provided. Recommended torque: 10 lb·ft.
2. Install mounting post into front bracket, install 3/8″ lock washer, and 3/8″ nut.
3. Gently secure 3/8″ nut, (allowing for post rotation), do not tighten at this time.

CAUTION

Maximum loading not to exceed 12 lbs.

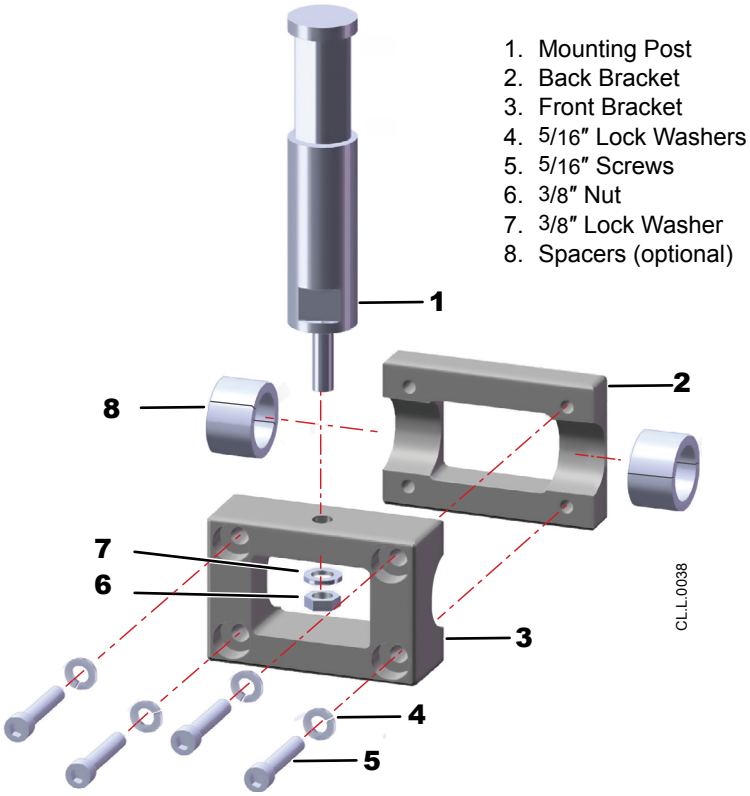

Figure 4-6 Transport Mounting Bracket Assembly (PN 50041)

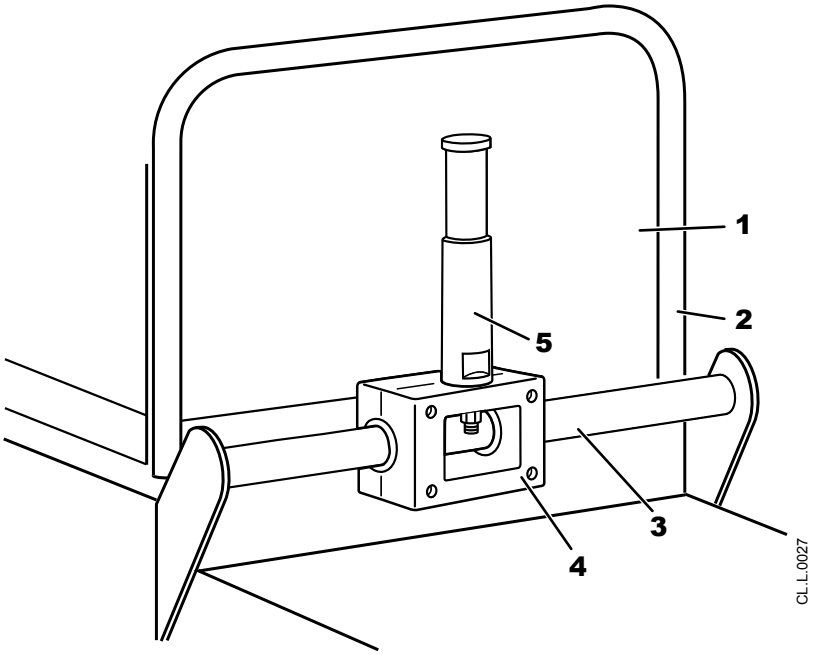

1. Transport Incubator
2. Incubator Bar
3. Incubator Handle
4. Transport Mounting Assembly
5. Mounting Post

Figure 4-7 Transport Mounting Bracket Assembly attached to a transport incubator

4.3.3 Moving the INOmax DS_{IR} Plus and INOblender from the Cart to the Transport Device

To detach the INOmax DS_{IR} Plus and the INOblender from the Cart for transport use either within the hospital or between hospitals:

Attach the Transport Regulator/Cap Assembly as described in *Section 4.1.1 Using the Transport Regulator/Cap Assembly.* Do the steps to *Test for High Pressure NO Leaks on page 9-4*.

With the INOMAX transport cylinder connected to the INOmax DS_{IR} Plus, refer to Figure 4-8, and continue with the following steps.

1. At the back of the INOmax DS_{IR} Plus, disconnect the IR cable from the INOmax DS_{IR} Plus (**1**, Figure 4-8).
2. Connect the IR cable from the Transport Regulator/Cap Assembly (**2**).
3. Disconnect the power cord from the wall receptacle and gather the cord using the velcro strap.
4. Loosen the INOmax DS_{IR} Plus clamp knob (**3**) and the INOblender clamp knob.

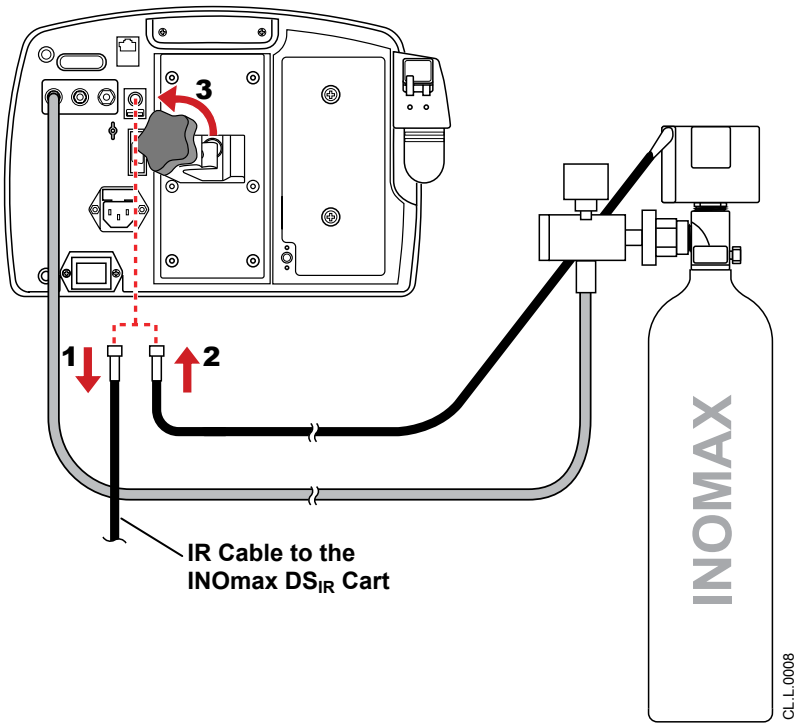

Figure 4-8 Changing the IR cable connection

Refer to Figure 4-9 and continue with the following steps:

5. Remove the INOmax DS_{IR} Plus (**4**) from the Cart and place it on one of the Mounting Posts on the transport device.
6. Remove the INOblender (**5**) from the Cart and place it on the other Mounting Post on the transport device.
7. Swivel the INOmax DS_{IR} Plus for appropriate viewing, then secure both devices by tightening the clamp knobs, and tightening the 3/8″ nut on the Mounting Post (20 lb-ft).
8. Reconnect the INOblender NO gas inlet hose to the INOmax DS_{IR} Plus. Attach the INOMAX regulator extension hose, if needed. Refer to the following section, *4.3.4 Connecting an INOblender Extension Hose*.
9. Connect the INOblender O_2 hose to a 3.5 bar (50 psig) portable O_2 source.

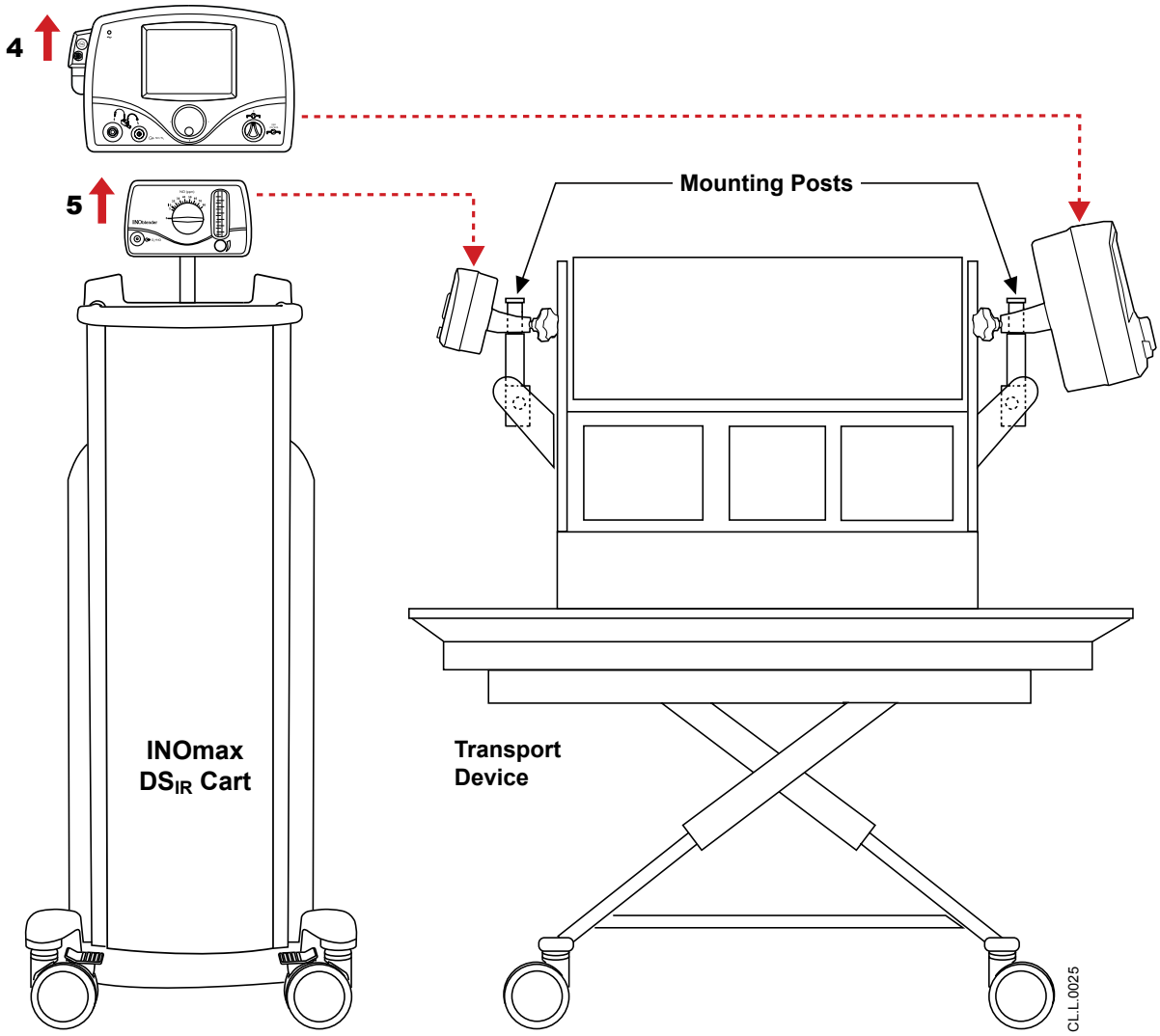

Figure 4-9 Example of mounting components from the INOmax DS_{IR} Cart onto the transport device

4.3.4 Connecting an INOblender Extension Hose

To mount the INOblender away from the INOmax DS_{IR} Plus, an INOblender extension hose can be added between the INOmax DS_{IR} Plus and the INOblender. To add the extension hose, refer to Figure 4-10 and continue with the following steps.

WARNING

Never use more than one length of extension hose between the regulator and the INOblender. Using more than one extension hose can result in increased NO_2 production.

1. Connect the male end of the extension hose to the INOblender inlet hose (**1**, Figure 4-10).
2. Connect the female end of the extension hose to the INOblender outlet (**2**) at the back of the INOmax DS_{IR} Plus.
3. Slide the Quick-Connect covers into place (**3**).

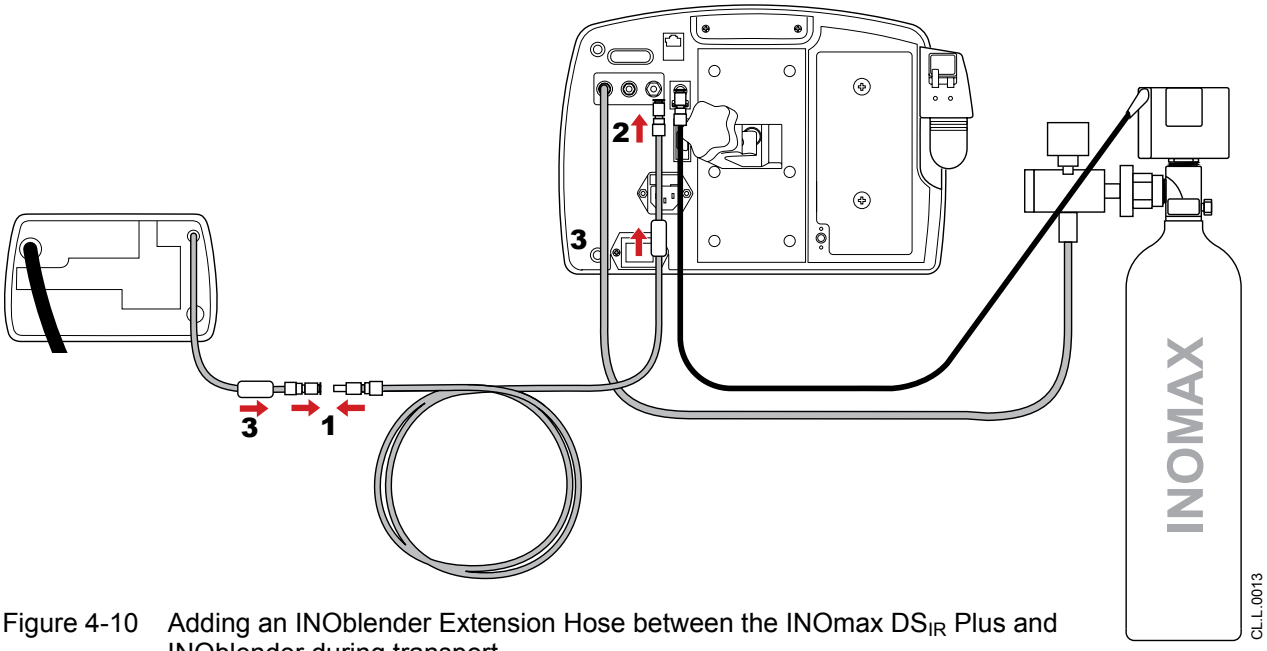

Figure 4-10 Adding an INOblender Extension Hose between the INOmax DS_{IR} Plus and INOblender during transport

4.3.5 Connecting the Extension Hose when the INOblender is in Stand-Alone Mode

As a stand-alone device, the INOblender is not connected to the INOmax DS_{IR} Plus. The INOblender extension hose may be placed between the INOMAX regulator and the INOblender to provide additional length between the INOMAX cylinder and the INOblender. To add the extension hose, continue with the following steps:

1. Connect the male end of the extension hose to the INOblender inlet hose (**1**, Figure 4-11).
2. Connect the female end of the extension hose to the INOMAX regulator hose (**2**).
3. Slide the Quick-Connect covers into place (**3**).

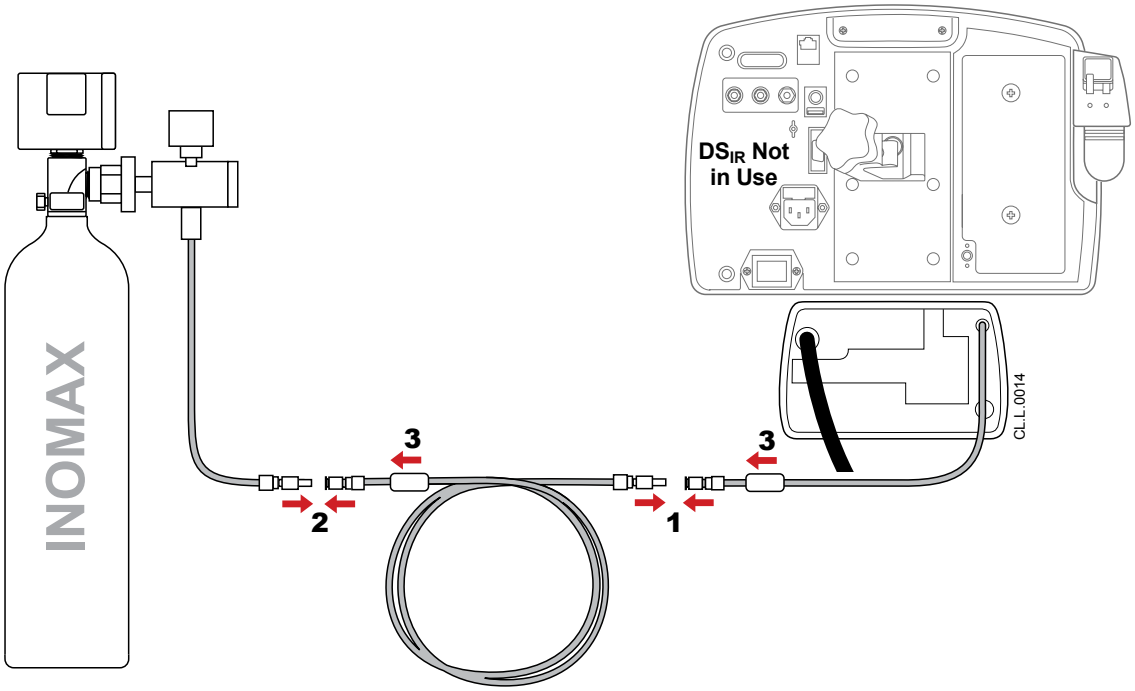

Figure 4-11 Adding an INOblender Extension Hose between the INOMAX regulator and INOblender for stand-alone use

4.3.6 Reattaching the INOmax DS_{IR} Plus and the INOblender to the Cart

Refer to Figure 4-12 and continue with the following steps:

When the transport is complete, replace the INOmax DS_{IR} Plus and the INOblender on the Cart for the next use:

1. Remove the INOblender oxygen hose from the portable oxygen source.
2. Disconnect the INOblender NO gas inlet hose from the INOmax DS_{IR} Plus. If the INOMAX regulator extension hose was used, remove it.
3. Return the INOblender to the Cart and secure the clamp (**1**).
4. Return the INOmax DS_{IR} Plus to the Cart and secure the clamp (**2**).

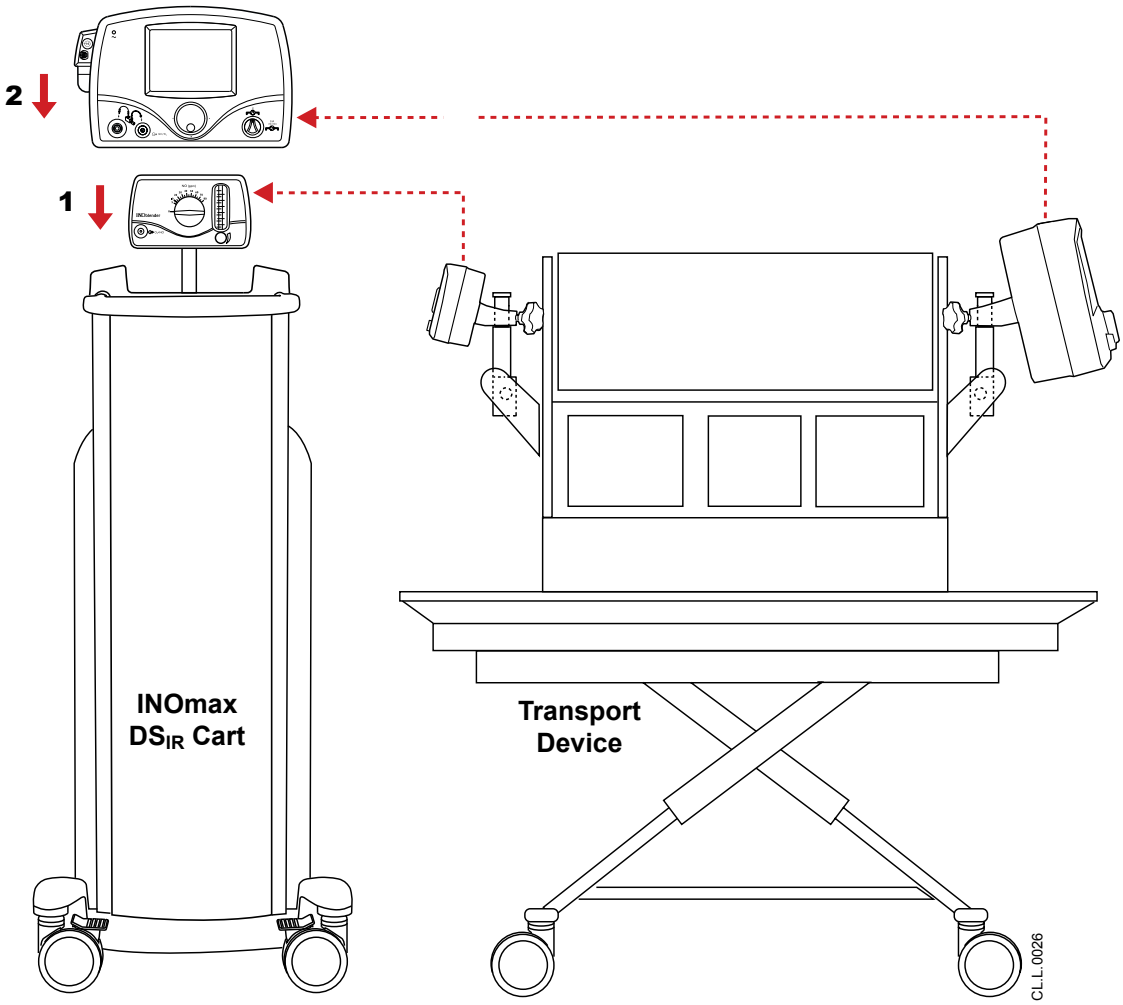

Figure 4-12 Returning components to the INOmax DS_{IR} Cart

Refer to Figure 4-13 and continue with the following steps:

5. Rotate the INOMAX Cart cylinder valve handle at the top of the cylinder counter-clockwise until resistance to further movement is felt, indicating the valve is fully opened. (**5**).
6. Rotate the cylinder valve handle clockwise to fully close the INOMAX Cart cylinder valve (**6**).
7. Push the INOMAX Cart cylinder regulator hose connector (**7**) into the purge port (**11**).
8. When the regulator reads zero, remove the regulator hose from the purge port and push it into the available INOMAX gas inlet (**8**).
9. Rotate the INOMAX Cart cylinder valve handle at the top of the cylinder counter-clockwise until resistance to further movement is felt, indicating the valve is fully opened. (**9**).
10. At the INOMAX transport cylinder, rotate the cylinder valve handle clockwise to fully close the valve (**10**).
11. Remove the INOMAX transport cylinder regulator hose from the INOMAX gas inlet and push the connector into the purge port (**11**).
12. When the transport regulator reads zero, remove the regulator hose from the purge port.
13. Disconnect the Transport Regulator/Cap Assembly IR cable from the back of the INOmax DS_{IR} Plus (**12**) (Cylinder Not Detected alarm may occur).
14. Attach the IR cable from the Cart to the back of the INOmax DS_{IR} Plus (**13**).

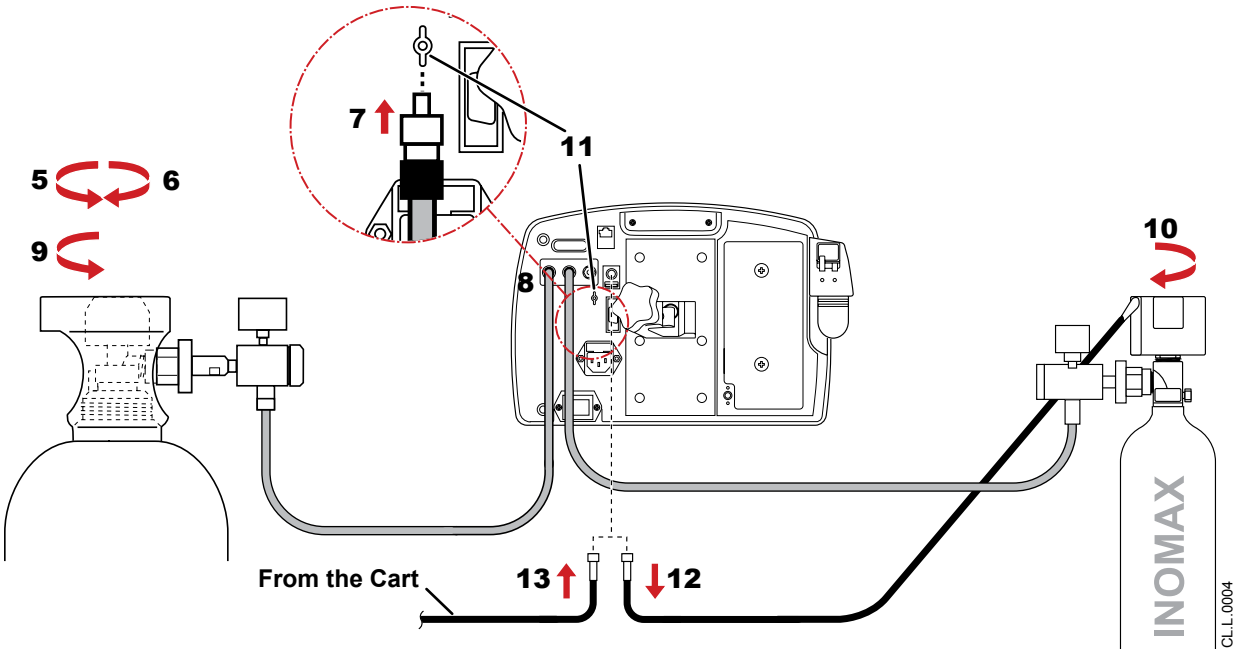

Figure 4-13 Re-attaching INOmax DS_{IR} Plus components

4.4 Using the INOblender for Transport as a Stand-alone Device

NOTE: Read the *INOblender Operation and Maintenance Manual* before using the INOblender. Follow instructions and obey all Warnings and Cautions.

WARNINGS

The purge procedure must be followed to help ensure NO_2 is purged from the system before the manual resuscitator bag is connected to the patient.

The manual bag should be squeezed repeatedly during use to avoid NO_2 from building up in the bag.

If the bag is not squeezed repeatedly while delivering INOMAX, the bag should be removed from the patient and the bag purge procedure performed before continuing.

The INOblender should only be used for manual resuscitation of patients. Use the smallest manual resuscitation bag adequate to deliver the desired tidal volume to minimize the delivered concentration of NO_2.

Do not use pneumatically powered nebulizers with the INOblender. This will result in significant over delivery of INOMAX in excess of 80 ppm.

- **The INOblender outlet pressure has been validated for use up to 0.4 bar (5.8 psig) pressure. The amount of back-pressure generated by pneumatic nebulizers is significantly greater [1.4 - 2.0 bar (20-30 psig)] and will result in over delivery of INOMAX in excess of 80 ppm with an 800 ppm cylinder. The user adjusted dose setting on the INOblender will not correlate with, or have an effect on, the actual delivered dose.**
- **In addition, the INOblender flowmeter is not back-pressure compensated and will display a lower than actual flow rate when pressure is applied to the outlet**

Some clinical conditions require an oxygen/air blender used with the INOblender to achieve FiO_2 levels less than 1.0:

- Using 100% O_2 at 3.5 bar (50 psig) is the labeled specification for the INOblender. The specification for INOMAX delivery when using the INOblender with 100% O_2 is +/- 20% of setting or 2 ppm (whichever is greater).
- Using O_2/air mixtures (21% to 95% v/v) reduces the delivered NO concentration by up to 10% of setting or 1 ppm (whichever is greater) compared to using 100% O_2 alone, resulting in a cumulative error up to +/- 30% of setting or 3 ppm (whichever is greater).

CAUTION

Make sure that the INOblender is always upright to accurately display the O_2 flow.

Typically, INOMAX is supplied to the INOmax DS_{IR} Plus and then to the INOblender.

As a stand-alone device, the INOblender is not connected to the INOmax DS_{IR} Plus. The INOMAX transport cylinder supplies the INOblender only. To disconnect the INOblender from the INOmax DS_{IR} Plus and use it as stand-alone device:

1. Attach the Transport Regulator/Cap Assembly as described in *Section 4.1.1 Using the Transport Regulator/Cap Assembly* (see **1**, Figure 4-14).

NOTE: The IR cable of the Transport Regulator/Cap Assembly does not need to be connected when using the INOblender as a stand alone device. Also, the INOblender does not need the INOmeter to be electrically functioning to deliver NO.

2. At the back of the INOmax DS_{IR} Plus, at the INOblender gas outlet disconnect the INOblender (**2**).
3. At the back of the INOmax DS_{IR} Plus, at the INOMAX gas inlet, disconnect the INOMAX regulator hose (**3**).

NOTE: Purge the regulator hose, if it has not been in use.

4. Connect the regulator hose from the INOMAX transport cylinder to the INOblender inlet hose to use the INOblender as a standalone device (**4**). If an extension hose is required, refer to *Section 4.3.4 Connecting an INOblender Extension Hose*.
5. Connect the INOblender oxygen hose to a 3.5 bar (50 psig) portable oxygen source (**5**).
6. Perform a pre-use checkout on the INOblender prior to use.

   Refer to *Section 3.3.3.2 Using the INOblender Stand-alone Pre-use Checkout Procedure* for additional information.

The INOblender can now be used as a stand-alone device.

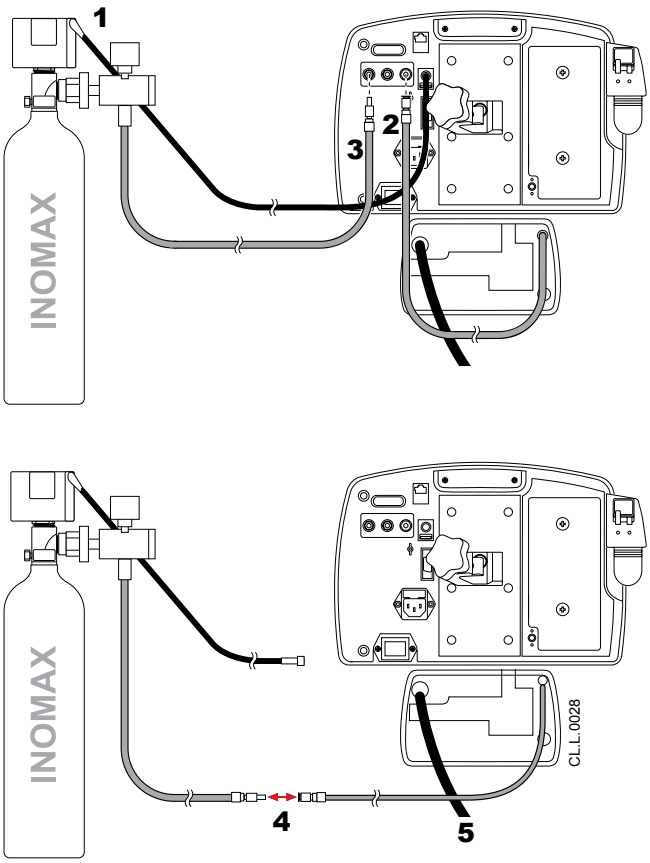

Figure 4-14 Switching to INOblender stand-alone mode during transport

4.5 Using a Separate INOmax DS_{IR} Plus for Transport

A separate INOmax DS_{IR} Plus can be used for transport. Before leaving the hospital:

1. Complete the Automated Pre-Use Checkout (refer to *Section 3.2*) for the transport INOmax DS_{IR} Plus. This ensures that the INOmax DS_{IR} Plus, INOMAX regulator, Transport Regulator/Cap Assembly and INOblender function properly.
2. Bring the appropriate backup equipment in case of a malfunction during the transport. The manufacturer recommends that a backup Transport Regulator/Cap Assembly be available during all transports (consult *Section 4.3.1 Recommended Items to Have Available in Transport*).

WARNING
A backup Transport Regulator/Cap Assembly should be available during all transports. If the primary Transport Regulator/Cap Assembly fails, therapy will be interrupted.

3. Transport equipment weight should be calculated to assure that the transport system meets weight allowance (Table 4-1).

Table 4-1 Device Weights and Dimensions

Part Description	Weight	Dimensions
INOmax DS_{IR} Plus	5.7 kg / 12.6 lb	350 mm (W) X 220 mm (H) X 160 mm (D)
INOblender (excluding O_2 hose)	1.5 kg / 3.3 lb	200 mm (W) X 140 mm (H) X 220 mm (D)
INOMAX Transport Cylinder (D-size)	3.6 kg / 8.0 lb	111 mm diameter X 517 mm (H)
Transport Regulator/Cap Assembly	0.90 kg / 2.0 lb	N/A
Transport Mounting Bracket Assembly Mounting Post (post only)	0.97 kg / 2.14 lb 0.29 kg / 0.64 lb	N/A
INOMAX Regulator Extension Hose	0.06 kg / 0.13 lb	N/A

NOTE: All sizes and weights are approximate and may vary slightly.

4. Properly secure the INOmax DS_{IR} Plus, INOblender, and INOMAX cylinders per hospital/air carrier protocols.

WARNING
If the INOmax DS_{IR} Plus or INOblender is used in a transport vehicle, the INOmax DS_{IR} Plus and INOblender should be securely attached to the transport incubator/gurney. Secure each device to a Mounting Post, which is part of the Transport Mounting Bracket Assembly, to prevent possible injury.

5. Ensure that INOMAX transport cylinders contain enough volume to last through the entire transport process. The following is a duration chart for a transport 800 ppm cylinder concentration* typically used in transport (Table 4-2).

Table 4-2 Duration Chart – INOMAX Transport Cylinder (D-Size)

		FLOW			
		5 L/min	10 L/min	20 L/min	40 L/min
INOMAX Dose (ppm)	5	7.0 Days	3.5 Days	1.8 Days	21 Hours
	10	3.5 Days	1.7 Days	21 Hours	10.5 Hours
	20	1.7 Days	20.7 Hours	10.3 Hours	5.2 Hours
	40	20 Hours	10 Hours	5 Hours	2.5 Hours
	80	9.5 Hours	4.8 Hours	2.4 Hours	1.2 Hours

CP.P.0025

This chart represents a range of doses available on the INOmax DS_{IR} Plus. Doses higher than 20 ppm exceed the recommended dose range.

* All calculations for the table above are based on a full cylinder of 128 bar (1,850 psig), 353 liter D cylinder, and also accounting for cylinder change at 13.8 bar (200 psig). The figures are calculated on total continuous flow cylinder conversion factor (2.6 liters per bar and 0.18 liters per psig).

- INOMAX flow = [desired dose × total gas delivery system flow] ÷ [cylinder concentration - desired dose]
- Cylinder volume = cylinder conversion factor × cylinder pressure (bar/psig)
- Cylinder duration = cylinder volume ÷ INOMAX flow rate

Calculations are considered estimates and may vary under clinical circumstances.

4.5.1 Connecting to the Transport Ventilator Circuit

The INOmax DS_{IR} Plus can be connected to a dual or single limb transport ventilator circuit (see Figure 4-15 and Figure 4-16).

Connecting to a Dual-Limb Transport Ventilator Circuit

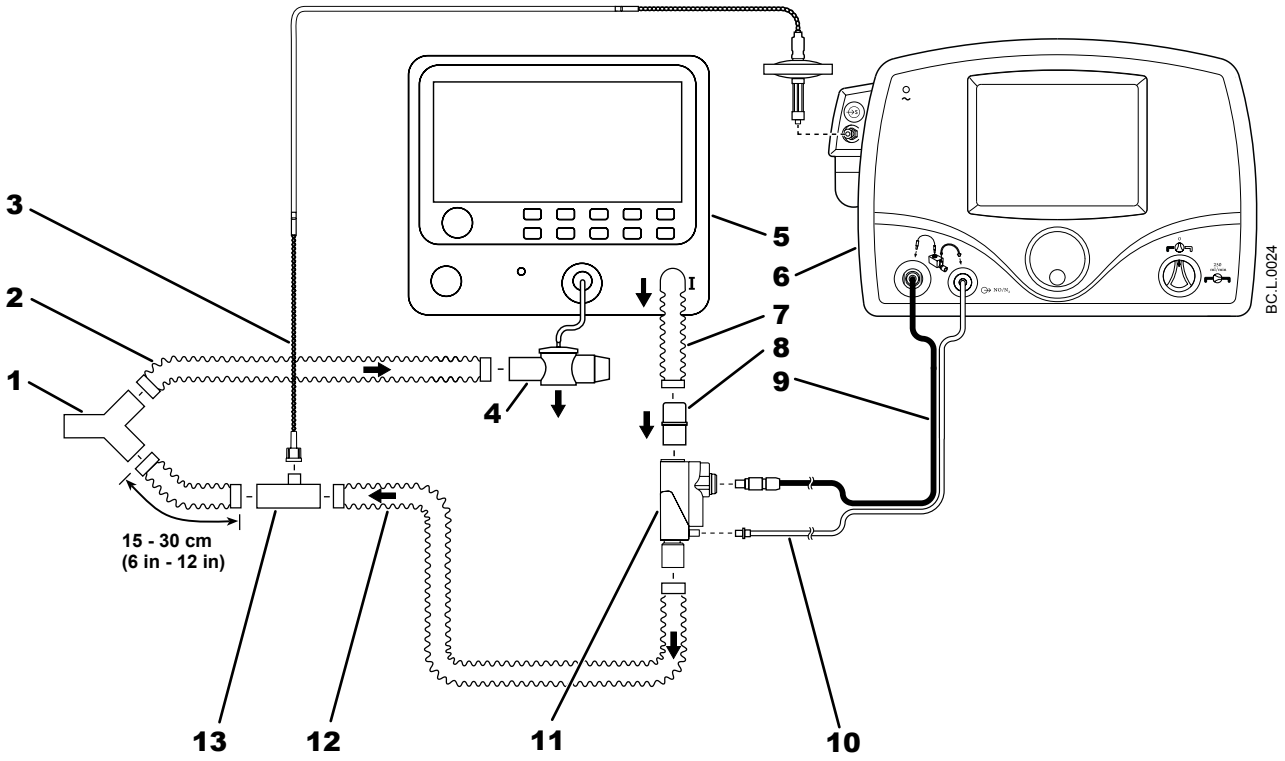

1. Patient Wye
2. Expiratory Breathing Circuit Hose
3. Patient Gas Sample Line and Filter
4. Ventilator Expiratory Valve
5. Ventilator
6. INOmax DS_{IR} Plus
7. Inspiratory Breathing Circuit Hose
8. 22M/15F X 22M/15F Adapter
9. Injector Module Electrical Cable
10. NO/N2 Injector Tube
11. Injector Module
12. Inspiratory Breathing Circuit Hose
13. Gas Sample Tee

Figure 4-15 Dual-limb transport ventilator circuit diagram

Connecting to a Single-Limb Transport Ventilator Circuit

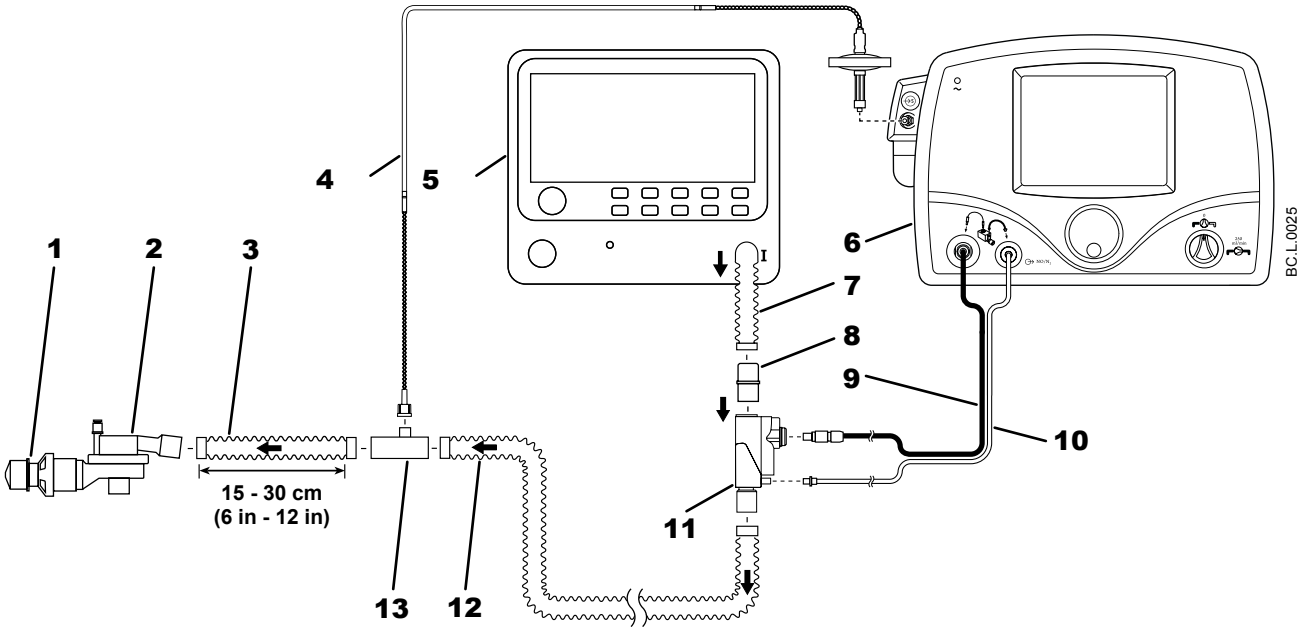

1. PEEP Valve
2. Patient/Exhalation Valve
3. Circuit Hose
4. Patient Gas Sample Line and Filter
5. Ventilator
6. INOmax DS_{IR} Plus
7. Inspiratory Breathing Circuit Hose
8. 22M/15F X 22M/15F Adapter
9. Injector Module Electrical Cable
10. NO/N2 Injector Tube
11. Injector Module
12. Inspiratory Breathing Circuit Hose
13. Gas Sample Tee

Figure 4-16 Single-limb transport ventilator circuit diagram

4.6 Running on Battery Power

A fully charged battery can power the INOmax DS_{IR} Plus for up to 6 hours in optimal conditions.

Connect the system to an electrical outlet for at least ten hours to completely recharge the battery.

Battery life can be extended by keeping the display brightness and the audio alarm volume at minimum settings.

4.6.1 “Running on Battery” Alert

When the power cord on the INOmax DS_{IR} Plus is unplugged from an electrical outlet, the message **Running on Battery** appears in the notification area of the screen (see **1**, Figure 4-17), and a **battery icon** (**2**) displays near the bottom.

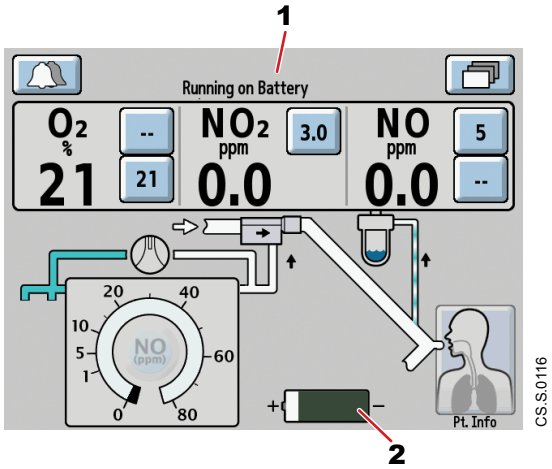

Figure 4-17 Running on Battery notification

4.6.2 “Low Battery” Alarm

When approximately 30 minutes of battery power remain, a **Low Battery alarm** will occur (**1**, Figure 4-18) and the **battery icon** will turn red (**2**).

When this alarm occurs, insert the power cord into an electrical outlet as soon as possible.

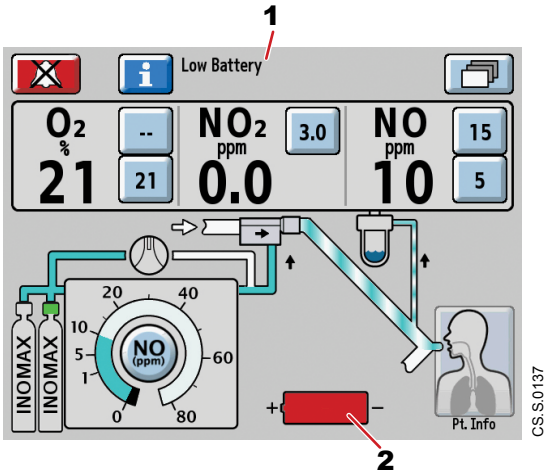

Figure 4-18 Notification: Low Battery Alarm

4.6.3 “Battery Failure” Alert

If the **Battery Failure message** appears (**1**, Figure 4-19) together with the **Battery Failure icon** (**2**), the INOmax DS_{IR} Plus has stopped communicating with the internal battery. Loss of communication with the battery prevents the INOmax DS_{IR} Plus from displaying the correct amount of battery charge on the display screen.

Take steps to ensure continuous power by plugging the power cord into an AC power outlet.

Remove from service as soon as possible and contact Customer Support (see back cover) to arrange for a replacement.

NOTE: Battery replacement is performed only by the manufacturer.

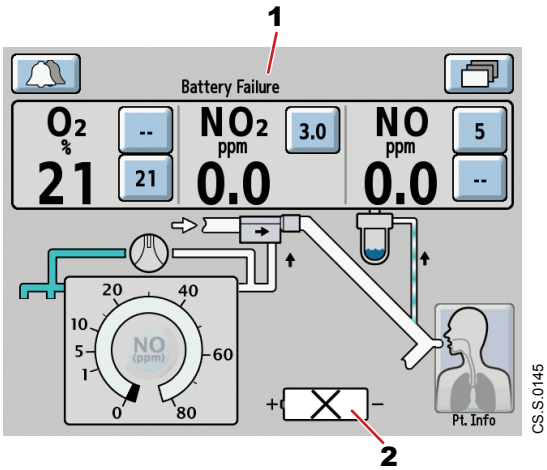

Figure 4-19 Notification: Battery Failure

Mallinckrodt™ Pharmaceuticals

INOmax DS IR® Plus

Calibrating Sensors

5/ Calibrating Sensors

Part No. 21204 Rev-03
2024-06

Mallinckrodt™ Pharmaceuticals

INOmax DS$_{IR}$® Plus

Calibrating Sensors

5/ Calibrating Sensors

Part No. 21204 Rev-03
2024-06

5 Calibrating Sensors

Periodic calibration of the O_2, NO_2, and NO sensors is required to keep the monitoring system within specifications. There are three types of sensor calibration:

- Automatic **Low Calibration**
- Manual **Low Calibration** (required in rare cases when automatic **Low Calibration** fails, or when troubleshooting the device)
- Manual **High Calibration**

No extra equipment is required for **Low Calibrations**. **High Calibrations** require calibration gas, and disposable parts which are available from the manufacturer. In-depth instructions for calibration procedures follow:

CAUTION

INOmax DS_{IR} Plus sensors may be calibrated while administering INOMAX to a patient. When calibrating the sensors the INOmax DS_{IR} Plus temporarily suspends monitoring functions and alarms. System alarms such as **Injector Module Failure**, **Low Cylinder Pressure**, and **Delivery Failure** remain active.

To access the calibration menu, select the **Menu button** on the **Main screen** (Figure 5-1).

On the **Menu screen** the lower part of the display contains the **Low Calibration (Low Cal)** and **High Calibration (High Cal) buttons** (see Figure 5-2). The date and time of the last successful **Low Calibration** appear below the **Low Cal button**. A due date displays above the **High Cal button**. If the date is flashing, at least one of the sensors is past due for a **High Calibration**.

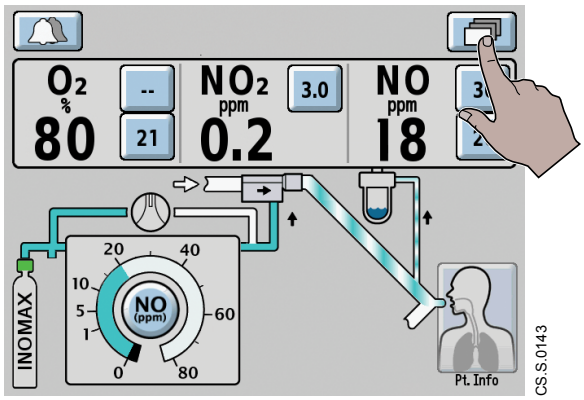

Figure 5-1 Selecting the Menu button on the Main screen

NOTES:

- A two-minute **Monitor Alarm Delay Active message** (**1**, Figure 5-2) will display any time the user exits the calibration screen, even if a calibration was not initiated. All other alarms are still active (see *Section 7.2 Identifying and Resolving Alarms for additional information*).
- Select the **Return to Previous Menu button** twice to return to the **Main screen** (**2**).

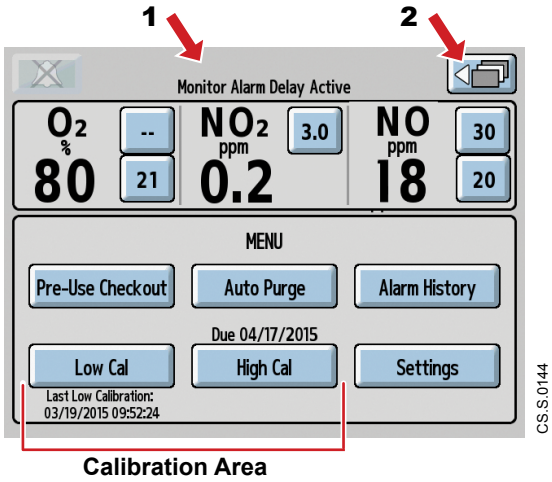

Figure 5-2 Calibration area of MENU screen

5.1 Low Calibration for O_2, NO_2, and NO Sensors

Low Calibration of the sensors uses room air to calibrate all three sensors at the same time. It occurs automatically at certain intervals but can also be started manually. However initiated, it works by the system drawing in room air through an inlet port behind the Water Bottle (not the Patient Gas Sample Line and Filter). This calibration does not require the user to remove the Patient Gas Sample Line and Filter from the breathing gas circuit.

5.1.1 Automatic Low Calibration

An automatic **Low Calibration** (approximately three minutes duration) is completed when the INOmax DS_{IR} Plus is turned ON and during the following conditions:

Table 5-1 Conditions Which Set Low Calibration Intervals

Condition	Interval(s)
After each dose change	3, 6, and 12 hour intervals
When dose is unchanged	12 hours
When dose is set to zero	24 hours

NOTE: Fifteen minutes with no user screen interactions is required before an automatic **Low Calibration** will initiate.

When the automatic **Low Calibration** completes successfully, a single tone sounds and the **Main screen** re-appears.

If the automatic **Low Calibration** fails, the device automatically reattempts the calibration. If it fails a second time a low priority alarm sounds, and a **Low Calibration Failed message** appears (see **1**, Figure 5-3). Select the **Alarm Help button** (**2**) and follow the steps indicated.

NOTES:

- When an automatic **Low Calibration** fails, the system continues to monitor gases using Low Calibration values from the last successful calibration.
- The next automatic **Low Calibration** will occur at the next interval. For example, if the three hour calibration was just completed, the next calibration will occur in six hours.

Following a second automatic **Low Calibration** failure, a manual **Low Calibration** should be attempted (*see Section 5.1.2*).

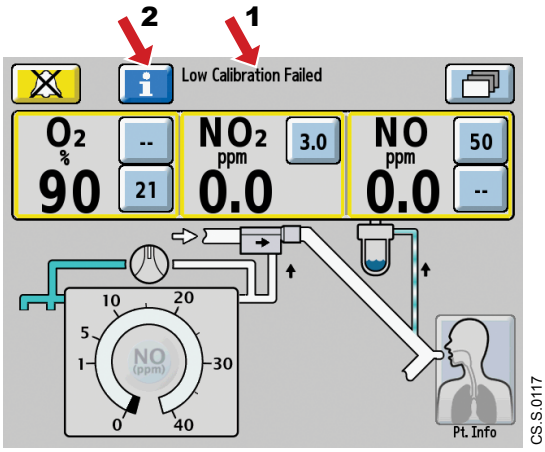

Figure 5-3 Low Calibration Failed alarm

5.1.2 Manual Low Calibration

To manually complete a **Low Calibration** of the O_2, NO_2, and NO sensors:

1. Select the **Menu button** on the **Main screen** (see Figure 5-1).
2. From the **MENU screen**, Select the **Low Cal button** to begin calibration (Figure 5-4). The calibration takes approximately three minutes during which progress bars indicate status for each sensor (Figure 5-5).
3. When the low-range calibration completes successfully, a single tone sounds and the **Main screen** re-appears.

   NOTE: The **Low Calibration** can be aborted by selecting the **CANCEL LOW CAL button**. This ends the process and returns the user to the **Main screen**.

If the manual **Low Calibration** attempt fails, contact Customer Support (see back cover).

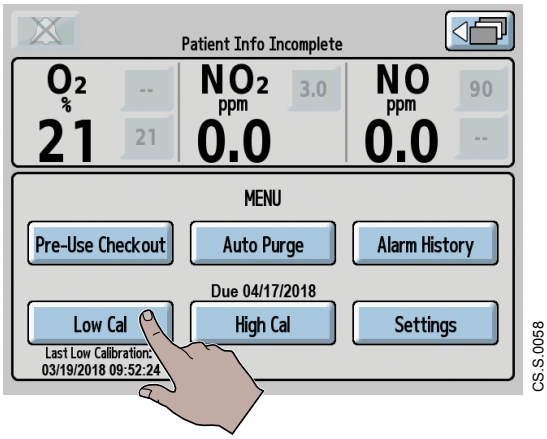

Figure 5-4 Selecting the Low Cal button

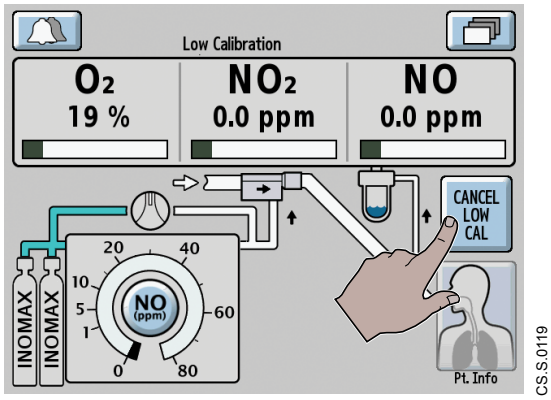

Figure 5-5 Selecting CANCEL LOW CAL

5.1.3 Failed Sensor During Calibration

If a sensor fails, a **Failed Sensor message** appears in the message area (see **1**, Figure 5-6) and a **Failed Sensor symbol** appears in the monitoring area of that sensor (**2**). Select the **Alarm Help button** (**3**) and follow the steps indicated.

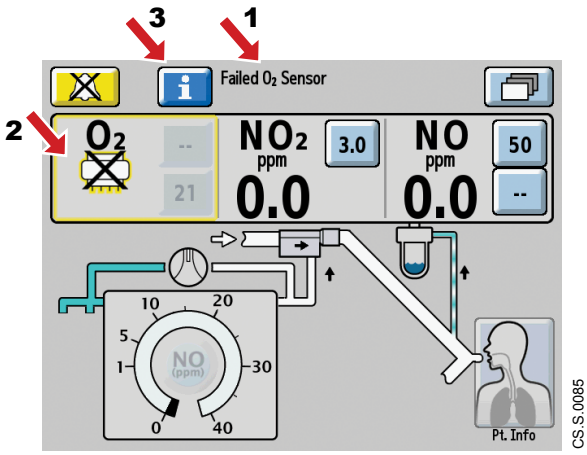

Figure 5-6 Main screen showing “Failed O_2 Sensor” message and Failed Sensor symbol

5.2 High Calibration for O_2, NO_2, and NO Sensors

The **High Calibration** process differs from **Low Calibration** in these ways:

- Sensors are calibrated one at a time.
- Sensors only need **High Calibration** when due (every 30 days) or when troubleshooting the system.
- **High Calibrations** require calibration gas, specific for each sensor.

Detailed instructions for each sensor-type follow:

5.2.1 High Calibration for the O_2 Sensor

CAUTION

Never connect the Patient Gas Sample Line and Filter directly to a gas source greater than 150 cmH_2O. This can damage the INOmax DS_{IR} Plus sampling system

NOTES:

- Before performing this procedure, complete the **Low Calibration** procedure. For detailed information, refer to *Section 5.1 Low Calibration for O_2, NO_2 and NO Sensors.*
- The **High O_2 Calibration** requires a user-supplied source of 100% O_2.

To perform a **High Calibration** for the O_2 sensor:

1. Select the **Menu button** on the **Main screen**.
2. From the **MENU Screen**, select the **High Cal button** (see Figure 5-7).

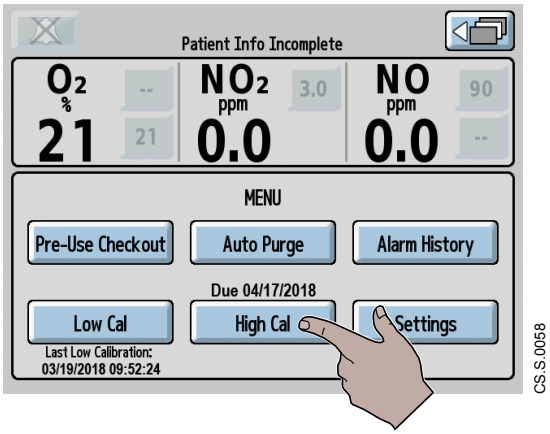

Figure 5-7 Selecting High Cal

3. At the **High Calibration screen**, select the **100% O_2 button** (Figure 5-8).
4. Confirm the Water Bottle, Water Separator Cartridge and Patient Gas Sample Line and Filter are in place on the INOmax DS_{IR} Plus.

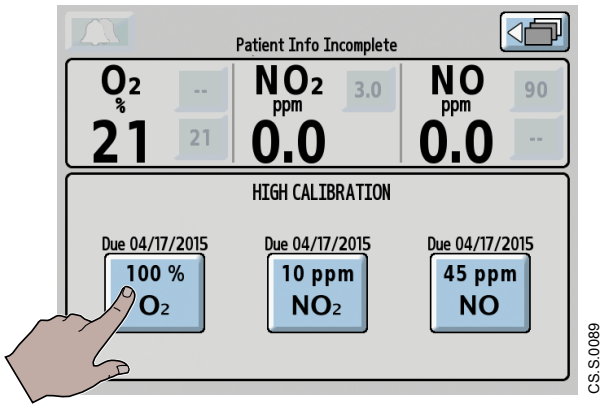

Figure 5-8 Selecting High Calibration for O_2

5. Assemble connectors into a calibration setup (see Figure 5-9) and set O_2 flow to 5 L/min.

WARNING

Cap the Gas Sample Tee if the Patient Gas Sample Line and Filter is removed from the patient breathing circuit. This will help prevent breathing circuit pressure loss.

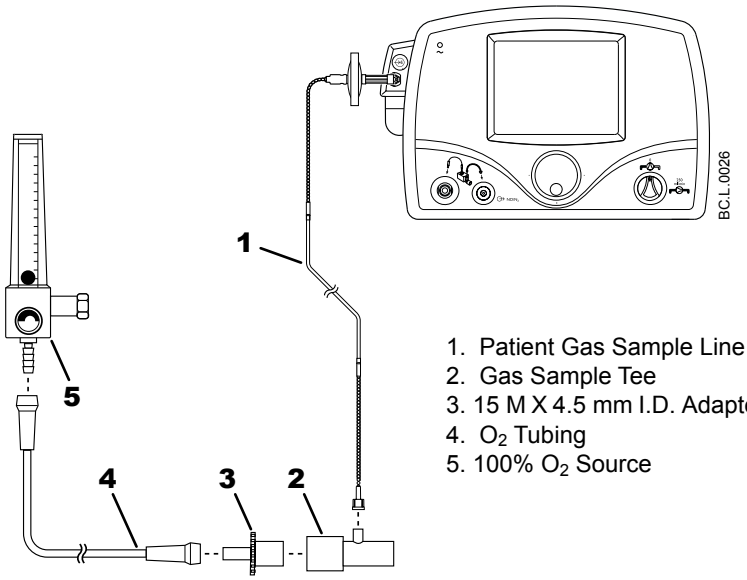

1. Patient Gas Sample Line and Filter
2. Gas Sample Tee
3. 15 M X 4.5 mm I.D. Adapter
4. O_2 Tubing
5. 100% O_2 Source

Figure 5-9 Connection assembly diagram

6. Select the **START CAL button** to start the High O_2 Calibration. (Figure 5-10).

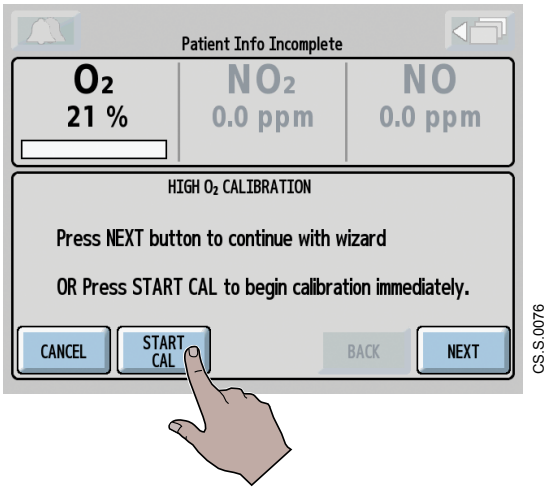

Figure 5-10 Selecting **START CAL** to start O_2 calibration

Table 5-2 Screen Buttons, Figure 5-10

CANCEL	Stops **High O_2 Calibration** and returns to the **High Calibration screen**
START CAL	Exits the wizard and begins the **High O_2 Calibration** immediately
NEXT	Opens the next screen of the **High O_2 Calibration** wizard*

* To view the sequential **High O_2 Calibration wizard** screens, turn to *page 5-8*.

The calibration takes approximately three minutes (Figure 5-11). While it is in progress, it can be cancelled in two ways (see Table 5-3).

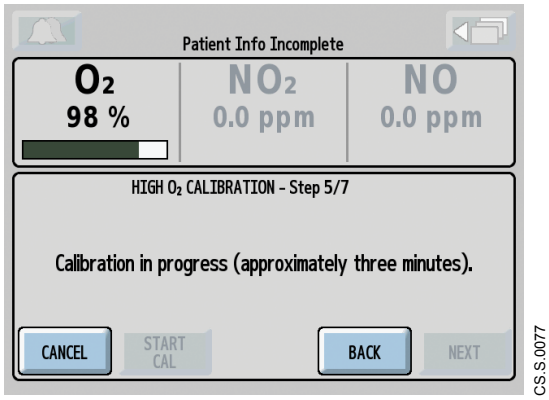

Figure 5-11 High Calibration for O_2 in-progress

Table 5-3 Screen Buttons, Figure 5-11

CANCEL	Stops **High O_2 Calibration** and returns to the **High Calibration screen**
BACK	Interrupts **High O_2 Calibration** and returns to the previous wizard step

If the **High Calibration** completes successfully:

- A single tone will sound.
- The screen will display 100% O_2 with a green bar below (see Figure 5-12).
- The NO_2 and NO values should be approximately 0.0 ppm.

7. Select **NEXT** and follow the instructions on the next screen.

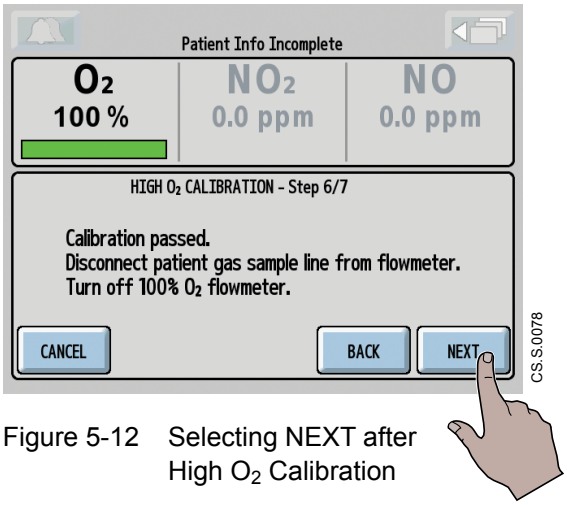

Figure 5-12 Selecting NEXT after High O_2 Calibration

Table 5-4 Screen Buttons, Figure 5-12

CANCEL	Returns to the **High O_2 Calibration screen**
BACK	Returns to step 4 of the wizard, to start the calibration again
NEXT	Opens the next screen of the **High O_2 Calibration** wizard

8. Disconnect the Patient Gas Sample Line and Filter from the calibration setup and turn OFF the O_2 flowmeter.

NOTE: Reconnect the Patient Gas Sample Line and Filter if it was removed from the patient breathing circuit.

High O_2 Calibration Interrupted

If the **High O_2 Calibration** is interrupted, the process stops and the progress bar turns yellow (Figure 5-13).

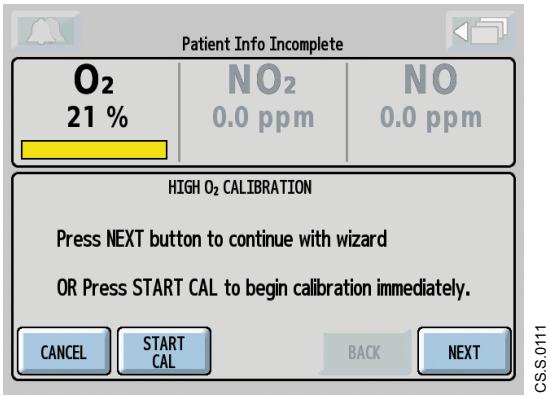

Figure 5-13 High O_2 Calibration interrupted

Table 5-5 Screen Buttons, Figure 5-13

CANCEL	Exits **High O_2 Calibration screen** and returns to the **High Calibration screen**
START CAL	Skips the **High Calibration** wizard and starts **High Calibration** immediately
NEXT	Starts the **High O_2 Calibration** wizard

High O_2 Calibration Failed

If the **High O_2 Calibration** fails, the progress bar turns red (see Figure 5-14).

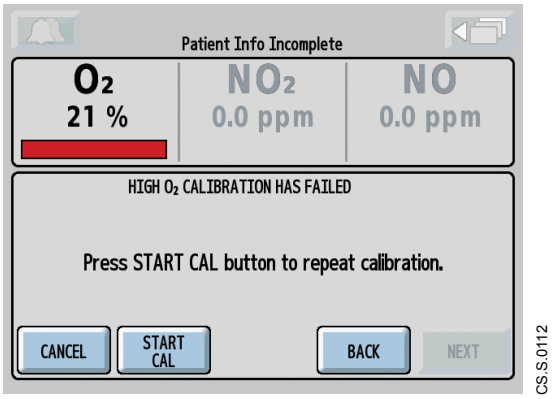

Figure 5-14 High O_2 Calibration failed

Table 5-6 Screen Buttons, Figure 5-14

CANCEL	Exits **High O_2 Calibration screen** and returns to the **High Calibration screen**
START CAL	Skips the **High Calibration** wizard and starts the **High Calibration** immediately
BACK	Stops **High O_2 Calibration** and returns to the previous wizard step

1. Confirm that the correct calibration gas and setup are being used.
2. Repeat the **High Calibration**. If the calibration fails again, contact Customer Support (see back cover).

NOTE: If the calibration is canceled, fails or is unsuccessful for any reason, the **High Calibration** set-point will revert to the last successful calibration value.

Failed Sensor During High O_2 Calibration

If a sensor fails, a **Failed Sensor message** appears in the message area (**1**, Figure 5-15) and a **Failed Sensor symbol** appears in the monitoring area of that sensor (**2**). Select the **Alarm Help button** (**3**) and follow the steps indicated.

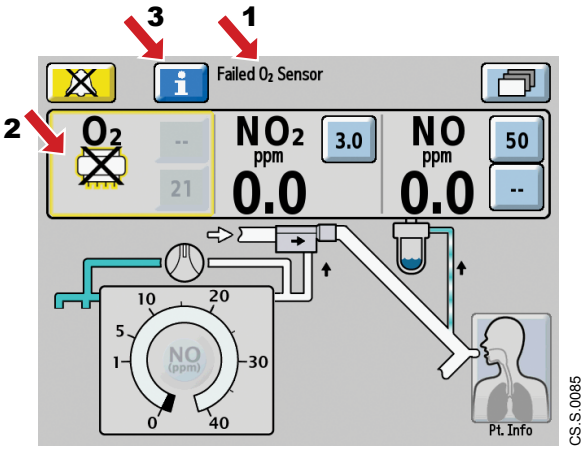

Figure 5-15 Main screen showing “Failed O_2 Sensor” message and Failed Sensor symbol

High O_2 Calibration Wizard, Screen Sequence

1. Select the **NEXT button** and follow the steps on the screen to continue with the **High O_2 Calibration wizard** (Figure 5-17).

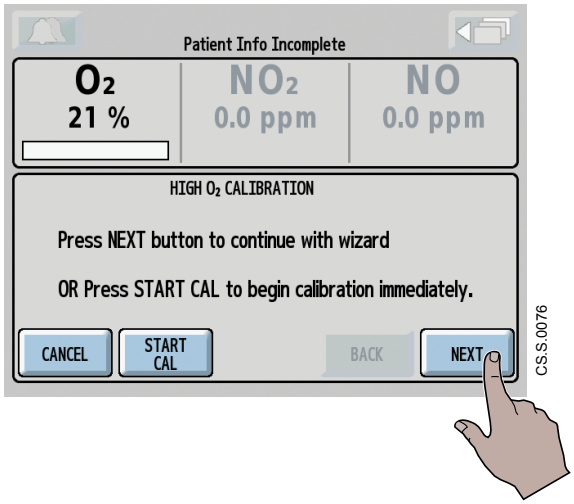

Figure 5-16 Selecting NEXT on High O_2 Calibration Screen

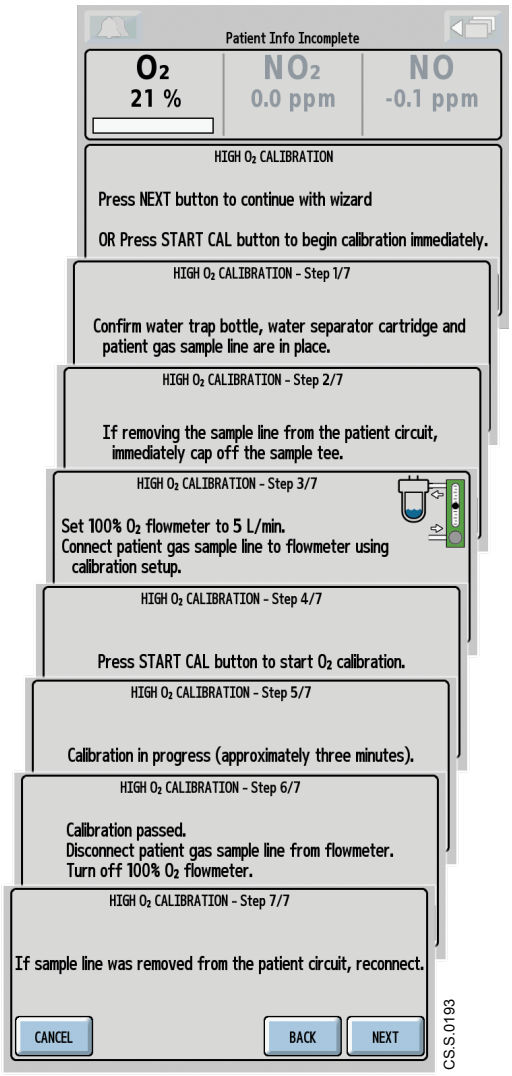

Figure 5-17 High O_2 Calibration Wizard, Screen Sequence

5.2.2 High Calibration for the NO_2 Sensor

CAUTION

Never connect the Sample Line directly to a gas source greater than 150 cmH_2O. This can damage the INOmax DS_{IR} Plus sampling system.

NOTE: Before performing this procedure, complete the **Low Calibration** procedure. For detailed information, refer to *Section 5.1, Low Calibration for O_2, NO_2, and NO Sensors*.

The manufacturer supplies INOcal calibration gas cylinders and calibration tubing kits for **High Calibration** of the NO_2 sensor. To complete a **High NO_2 Calibration** refer to Figure 5-18 and complete the following steps:

1. Inspect calibration tubing for excessive wear (cracks, breaks, discoloration) and replace if necessary.

CAUTION

A leak in the calibration tubing kit can dilute the calibration gas by entraining room air. This results in a lower calibration gas value, which artificially inflates the high calibration setpoint. Therefore the NO_2 values displayed will be greater than actual.

2. Make sure that the one-way check valve is installed and oriented as shown (**1**).

   Installing the one-way valve incorrectly can lead to over-pressurization of the sampling system.
3. Ensure that the correct calibration gas is selected (NO_2 10 ppm, pink label) and verify the INOcal cylinder expiration date is not exceeded.
4. Remove the cylinder cap and inspect the fitting for damaged threads and contaminants (**2**). Replace INOcal cylinder if necessary.
5. Check the seal on the regulator. Verify it is correctly in place and undamaged (**3**).
6. Connect the calibration regulator to the INOcal cylinder (**4**); turn regulator handle counter-clockwise to tighten.
7. If the regulator outlet diameter measures 0.24 in. (6.10 mm) then insert the tubing adapter (**5**).
8. Attach the tubing kit to regulator outlet (**6**).

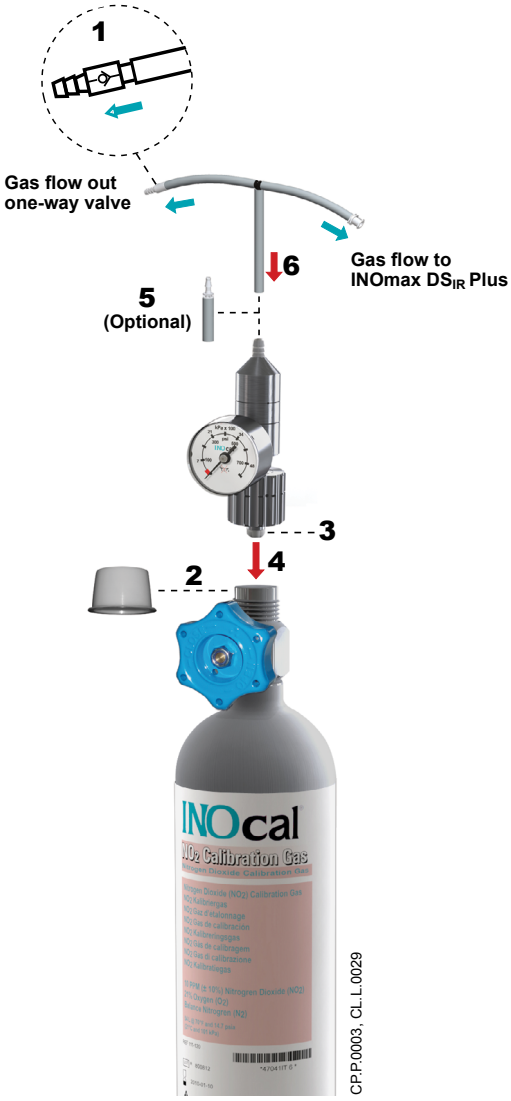

Figure 5-18 High NO_2 Calibration setup

9. Confirm that Water Bottle, Water Separator Cartridge and Patient Gas Sample Line and Filter are in place on the INOmax DS_{IR} Plus (see *Section 2.7*).
10. Select the **Menu button** on the **Main screen** (see Figure 5-1).
11. From the **MENU screen**, select the **High Cal button** (Figure 5-20).

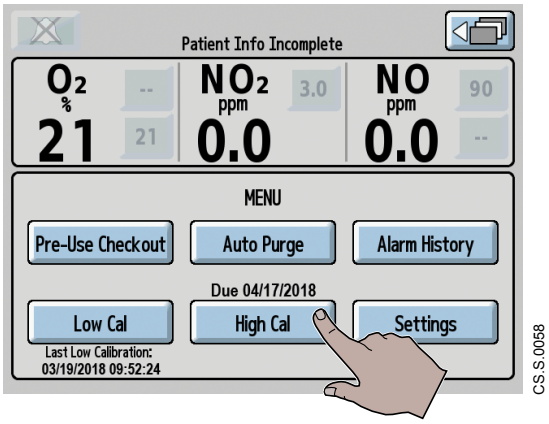

Figure 5-20 Selecting High Cal

12. At the **High Calibration screen** select the **10 ppm NO_2 button** (Figure 5-21).
13. Turn the INOcal cylinder valve handle counter-clockwise at least one full turn to open the cylinder (see **1**, Figure 5-22).
14. Connect the Patient Gas Sample Line and Filter to the calibration tubing (**2**).

    Verify the INOcal cylinder pressure is approximately 1.7 bar (25) psig or greater (above the shaded area) on the pressure gauge. If not, replace the cylinder with one that has sufficient pressure.

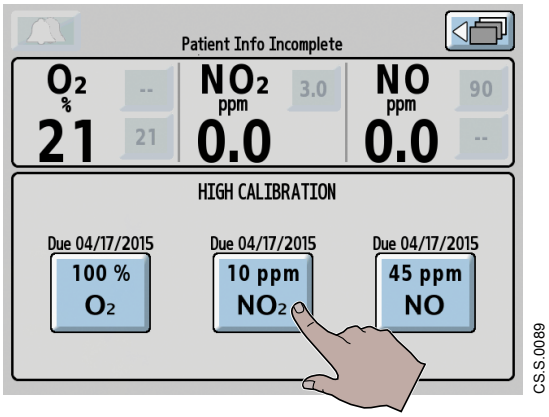

Figure 5-21 Selecting High Calibration for NO_2

NOTE: If the Patient Gas Sample Line and Filter was removed from the breathing circuit, cap the Gas Sample Tee (see Figure 5-19).

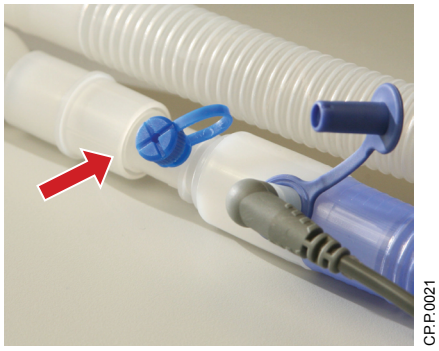

Figure 5-19 Luer fitting capped

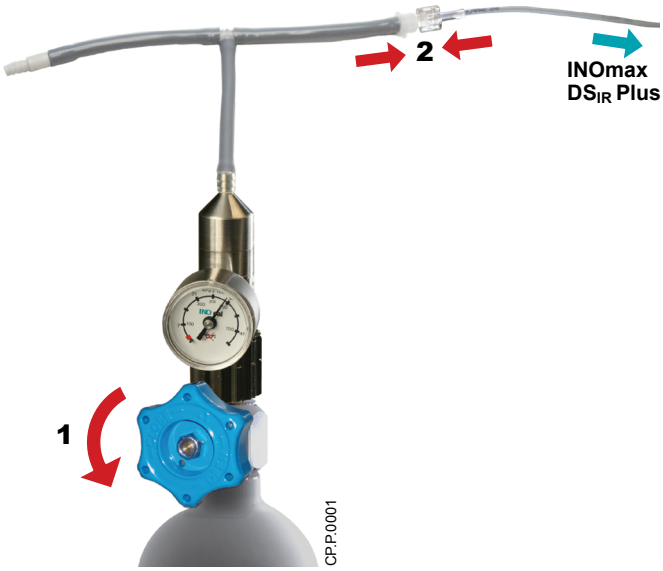

Figure 5-22 High NO_2 Calibration setup

15. Select the **START CAL button** to start the **High NO_2 Calibration** (see Figure 5-23).

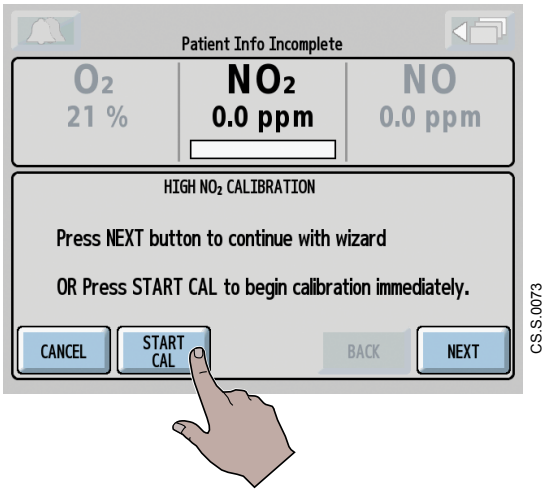

Figure 5-23 Selecting START CAL to start NO_2 calibration

Table 5-7 Screen Buttons, Figure 5-23

CANCEL	Stops **High NO_2 Calibration** and returns to the **High Calibration screen**
START CAL	Exits the wizard and begins the **High NO_2 Calibration** immediately
NEXT	Opens the next screen of the **High NO_2 Calibration** wizard*

* To view the sequential **High NO_2 Calibration wizard** screens, turn to *page 5-14*.

The calibration takes approximately three minutes (see Figure 5-24). While it is in progress, it can be cancelled in two ways (see Table 5-8).

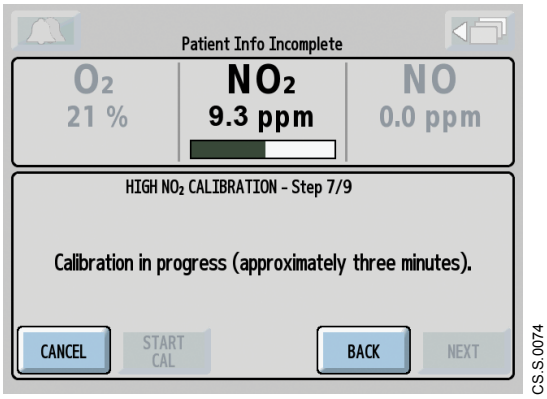

Figure 5-24 High Calibration for NO_2 in-progress

Table 5-8 Screen Buttons, Figure 5-24

CANCEL	Stops **High NO_2 Calibration** and returns to the **High Calibration screen**
BACK	Interrupts **High NO_2 Calibration** and returns to the previous wizard step

If the **High Calibration** completes successfully:

- A single tone will sound.
- The screen will display 10 ppm NO_2 with a green bar below (see Figure 5-25).
- The O_2 value should be about 21%.
- The NO value should be about 0.0 ppm.

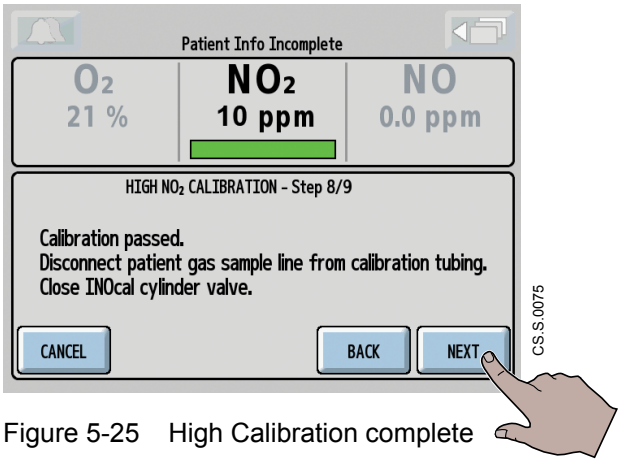

Figure 5-25 High Calibration complete

Table 5-9 Screen Buttons, Figure 5-25

CANCEL	Returns to the **High Calibration screen**
BACK	Returns to step 4 of the wizard, to start the calibration again
NEXT	Opens the next screen of the **High NO_2 Calibration** wizard

16. Select **NEXT** to return to the **High Calibration screen**.
17. Once the calibration is complete, disconnect the Patient Gas Sample Line and Filter from the calibration tubing and close the INOcal cylinder valve by turning the cylinder valve handle clockwise to fully close.

NOTE: Reconnect Patient Gas Sample Line and Filter if it was removed from the patient breathing circuit.

High NO_2 Calibration Interrupted

If the **High NO_2 Calibration** is interrupted, the process stops and the progress bar turns yellow (see Figure 5-26).

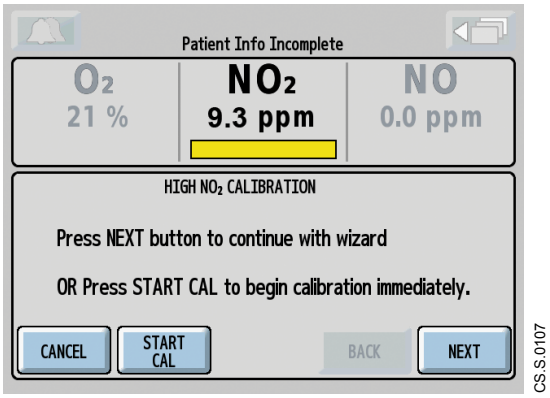

Figure 5-26 High NO_2 Calibration interrupted

Table 5-10 Screen Buttons, Figure 5-26

CANCEL	Exits **High NO_2 Calibration screen** and returns to the **High Calibration screen**
START CAL	Skips the **High Calibration** wizard and starts **High NO_2 Calibration** immediately
NEXT	Starts the **High NO_2 Calibration** wizard

High NO_2 Calibration Failed

If the **High NO_2 Calibration** fails, the progress bar turns red (see Figure 5-27).

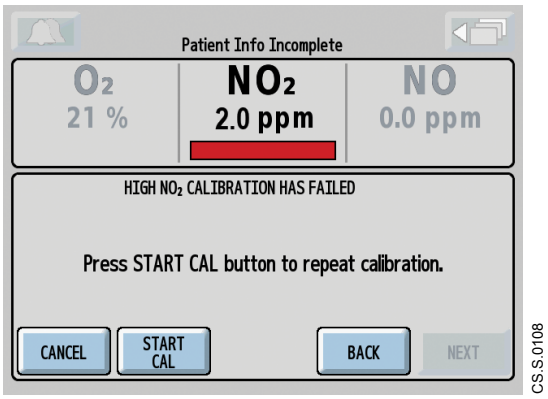

Figure 5-27 High NO_2 Calibration failed

Table 5-11 Screen Buttons, Figure 5-27

CANCEL	Exits **High NO_2 Calibration screen** and returns to the **High Calibration screen**
START CAL	Skips the **High Calibration** wizard and starts **High NO_2 Calibration** immediately
BACK	Stops **High NO_2 Calibration** and returns to the previous wizard step

1. Confirm that the correct calibration gas and setup are being used.
2. Repeat the **High Calibration**. If the calibration fails again, contact Customer Support (see back cover).

NOTE: If the calibration is canceled, fails or is unsuccessful for any reason, the **High Calibration set-point** will revert to the last successful calibration value.

Failed Sensor During High NO_2 Calibration

If a sensor fails, a **Failed Sensor message** appears in the message area (**1**, Figure 5-28) and a **Failed Sensor symbol** (**2**) appears in the monitoring area of that sensor. Select the **Alarm Help button** (**3**) and follow the steps indicated.

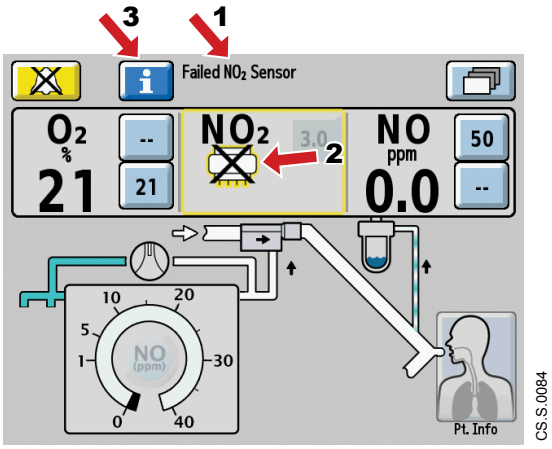

Figure 5-28 Main Screen with “Failed NO_2 Sensor” message and Failed Sensor symbol

High NO_2 Calibration Wizard, Screen Sequence

1. Select the **NEXT button** and follow the steps on the screen to continue with the **High NO_2 Calibration wizard** (Figure 5-30).

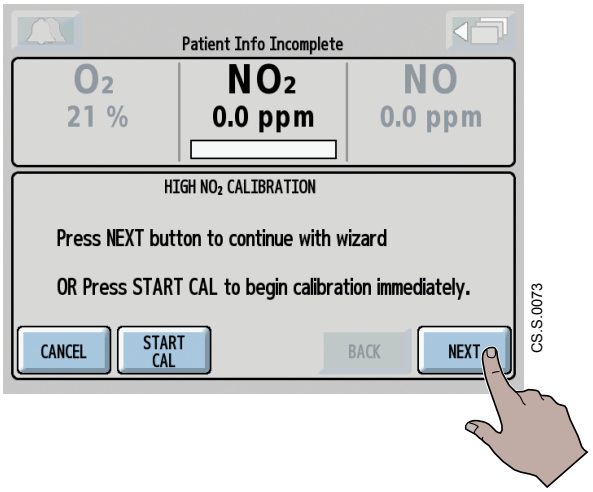

Figure 5-29 Selecting NEXT on High NO_2 Calibration Screen

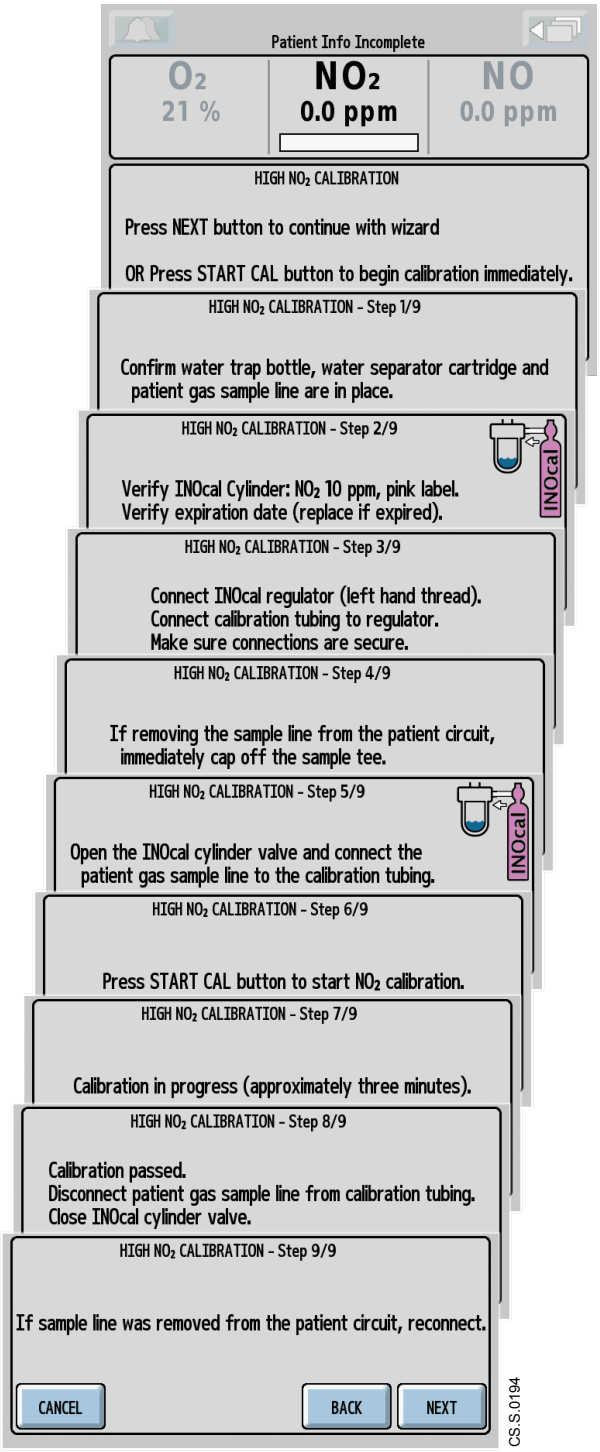

Figure 5-30 High NO_2 Calibration Wizard, Screen Sequence

5.2.3 High Calibration for the NO Sensor

CAUTION

Never connect the Sample Line directly to a gas source greater than 150 cmH_2O. This can damage the INOmax DS_{IR} Plus sampling system.

NOTE: Before performing this procedure, complete the Low Calibration procedure. For detailed information, refer to *Section 5.1, Low Calibration for O_2, NO_2, and NO Sensors*.

The manufacturer supplies INOcal calibration gas cylinders and calibration tubing kits for **High Calibration** of the NO sensor. To complete a **High NO Calibration** refer to Figure 5-31 and complete the following steps:

1. Inspect calibration tubing for excessive wear (cracks, breaks, discoloration) and replace if necessary.

CAUTION

A leak in the calibration tubing kit can dilute the calibration gas by entraining room air. This results in a lower calibration gas value, which artificially inflates the high calibration setpoint. Therefore the NO values displayed will be greater than actual.

2. Make sure that the one-way check valve is installed and oriented as shown (**1**).

   Installing the one-way valve incorrectly can lead to over-pressurization of the sampling system.
3. Ensure that the correct calibration gas is selected (NO 45 ppm, blue label) and verify the INOcal cylinder expiration date is not exceeded.
4. Remove the cylinder cap and inspect it for damaged threads and contaminants (**2**). Replace INOcal cylinder if necessary.
5. Check seal on regulator. Verify it is correctly in place and undamaged (**3**).
6. Connect the calibration regulator to the INOcal cylinder (**4**); turn regulator handle counter-clockwise to tighten.
7. If the regulator outlet diameter measures 0.24 in. (6.10 mm) then insert the tubing adapter (**5**).
8. Attach the tubing kit to regulator outlet (**6**).

Figure 5-31 High NO Calibration setup

9. Confirm that Water Bottle, Water Separator Cartridge and Patient Gas Sample Line and Filter are in place on the INOmax DS_{IR} Plus (see *Section 2.7*).
10. Select the **Menu button** on the **Main screen** (see Figure 5-1).
11. From the **MENU screen**, select the **High Cal button** (Figure 5-33).

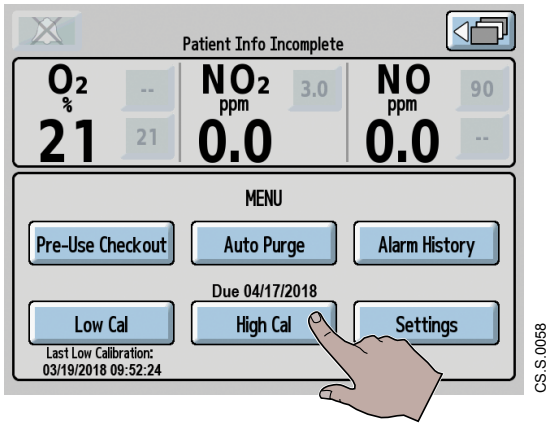

Figure 5-33 Selecting High Cal

12. At the **High Calibration screen** select the **45 ppm NO button** (Figure 5-34).
13. Turn the INOcal cylinder valve handle counter-clockwise at least one full turn to open the cylinder valve (see **1**, Figure 5-35).
14. Connect the Patient Gas Sample Line and Filter to the calibration tubing (**2**).

    Verify the INOcal cylinder pressure is approximately 1.7 bar (25 psig) or greater (not in the shaded area). If not, replace the cylinder with one that has sufficient pressure.

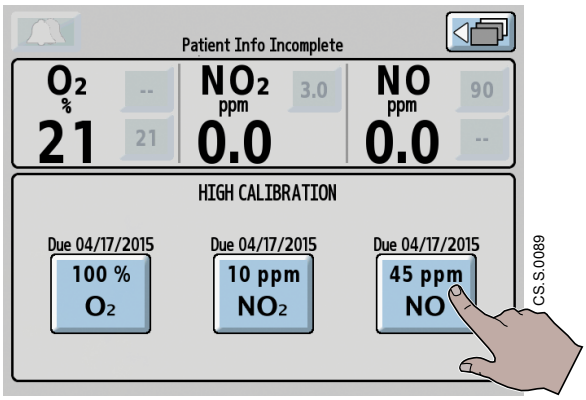

Figure 5-34 Selecting High Calibration for NO

NOTE: If the Patient Gas Sample Line and Filter are removed from patient breathing circuit, cap the Gas Sample Tee (see Figure 5-32).

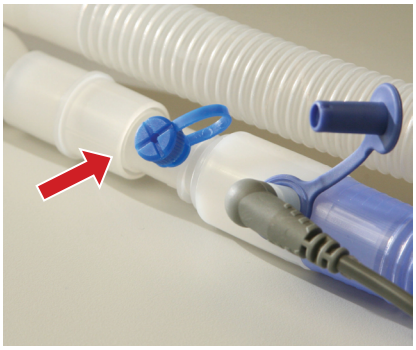

Figure 5-32 Luer fitting capped

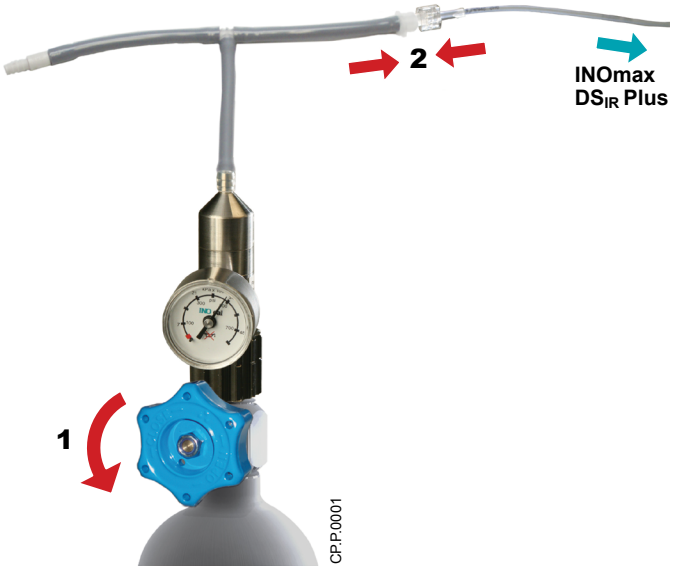

Figure 5-35 High NO Calibration setup

15. Select the **START CAL button** to start the **High NO Calibration** (see Figure 5-36).

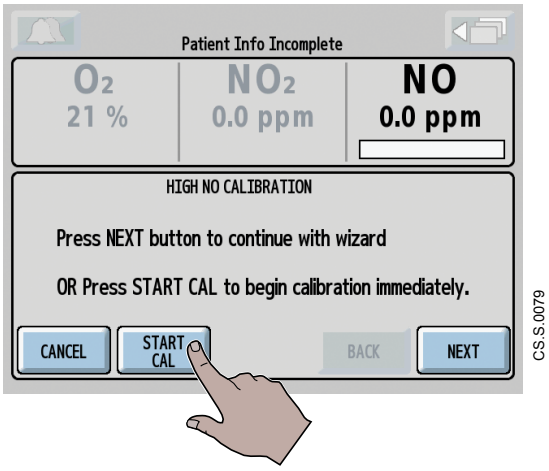

Figure 5-36 Selecting START CAL to start NO calibration

Table 5-12 Screen Buttons, Figure 5-36

CANCEL	Stops **High NO Calibration** and returns to the **High Calibration screen**
START CAL	Exits the wizard and begins the **High NO Calibration** immediately
NEXT	Opens the next screen of the **High NO Calibration** wizard*

* To view the sequential **High NO Calibration wizard** screens, turn to *page 5-20*.

The calibration takes approximately three minutes (see Figure 5-37). While it is in progress, it can be cancelled in two ways (see Table 5-13).

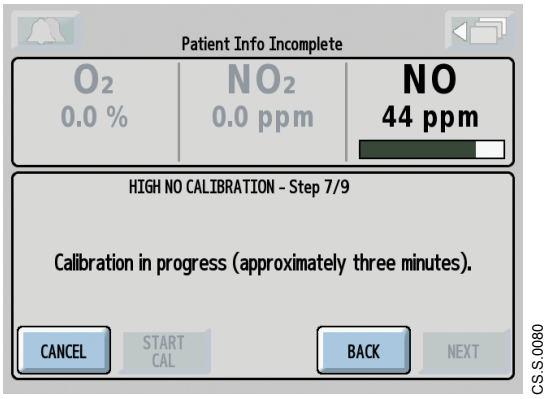

Figure 5-37 High Calibration for NO in-progress

Table 5-13 Screen Buttons, Figure 5-37

CANCEL	Stops **High NO Calibration** and returns to the **High Calibration screen**
BACK	Interrupts **High NO Calibration** and returns to the previous wizard step

If the **High Calibration** completes successfully:

- A single tone will sound.
- The screen will display 45 ppm NO with a green bar below (see Figure 5-38).
- The O_2 value should be about zero percent.
- The NO_2 value should be about zero ppm.

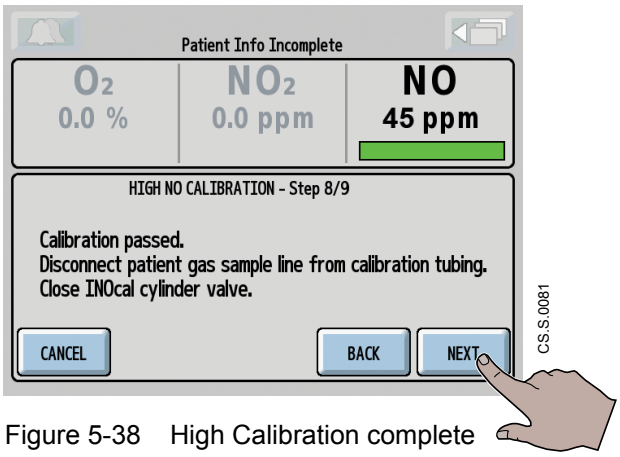

Figure 5-38 High Calibration complete

Table 5-14 Screen Buttons, Figure 5-38

CANCEL	Returns to the **High Calibration screen**
BACK	Returns to step 4 of the wizard, to start the calibration again
NEXT	Opens the next screen of the High NO Calibration wizard

16. Select **NEXT** to return to the **High Calibration screen**.
17. Once the calibration is complete, disconnect the Patient Gas Sample Line and Filter from the calibration tubing and close the INOcal cylinder valve by turning the cylinder valve handle clockwise to fully close.

NOTE: Reconnect the Patient Gas Sample Line and Filter if it was removed from the patient breathing circuit.

High NO Calibration Interrupted

If the **High NO Calibration** is interrupted, the process stops and the progress bar turns yellow (see Figure 5-39).

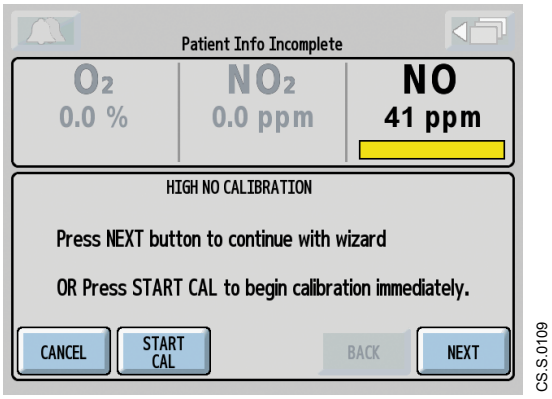

Figure 5-39 High NO Calibration interrupted

Table 5-15 Screen Buttons, Figure 5-39

CANCEL	Exits **High NO Calibration screen** and returns to the **High Calibration screen**
START CAL	Skips the **High Calibration** wizard and starts **High NO Calibration** immediately
NEXT	Starts the **High NO Calibration** wizard

High NO Calibration Failed

If the **High NO Calibration** fails, the progress bar turns red (see Figure 5-40).

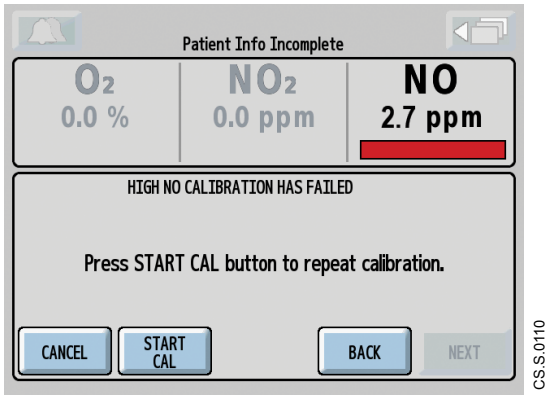

Figure 5-40 High NO Calibration failed

Table 5-16 Screen Buttons, Figure 5-40

CANCEL	Exits **High NO Calibration screen** and returns to the **High Calibration screen**
START CAL	Skips the **High Calibration** wizard and starts **High NO Calibration** immediately
NEXT	Starts the **High NO Calibration** wizard

1. Confirm that the correct calibration gas and setup are being used.
2. Repeat the **High Calibration**. If the calibration fails again, contact Customer Support (see back cover).

NOTE: If the calibration is canceled, fails or is unsuccessful for any reason, the **High Calibration set-point** will revert to the last successful calibration value.

Failed Sensor During High NO Calibration

If a sensor fails, a **Failed Sensor message** appears in the message area (**1**, Figure 5-41) and a **Failed Sensor symbol** (**2**) appears in the monitoring area of that sensor. Select the **Alarm Help button** (**3**) and follow the steps indicated.

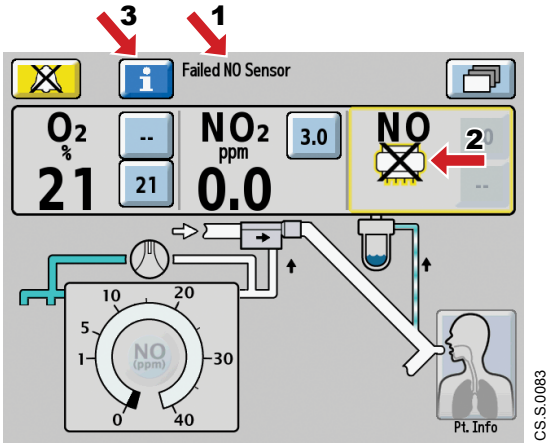

Figure 5-41 Main Screen with “Failed NO Sensor” message and Failed Sensor symbol

High NO Calibration Wizard, Screen Sequence

1. Select the **NEXT button** and follow the steps on the screen to continue with the **High NO Calibration wizard** (Figure 5-43).

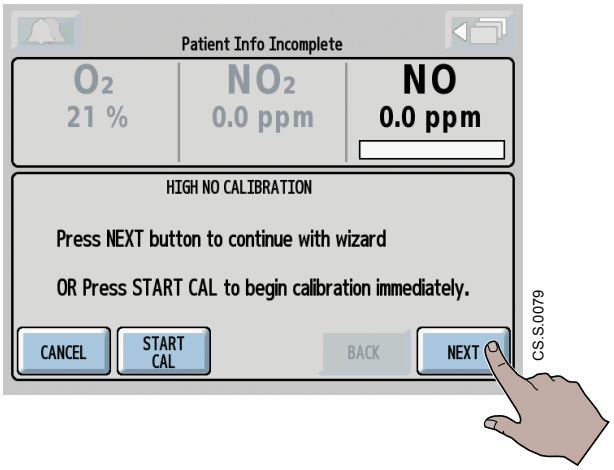

Figure 5-42 Selecting NEXT on High NO calibration

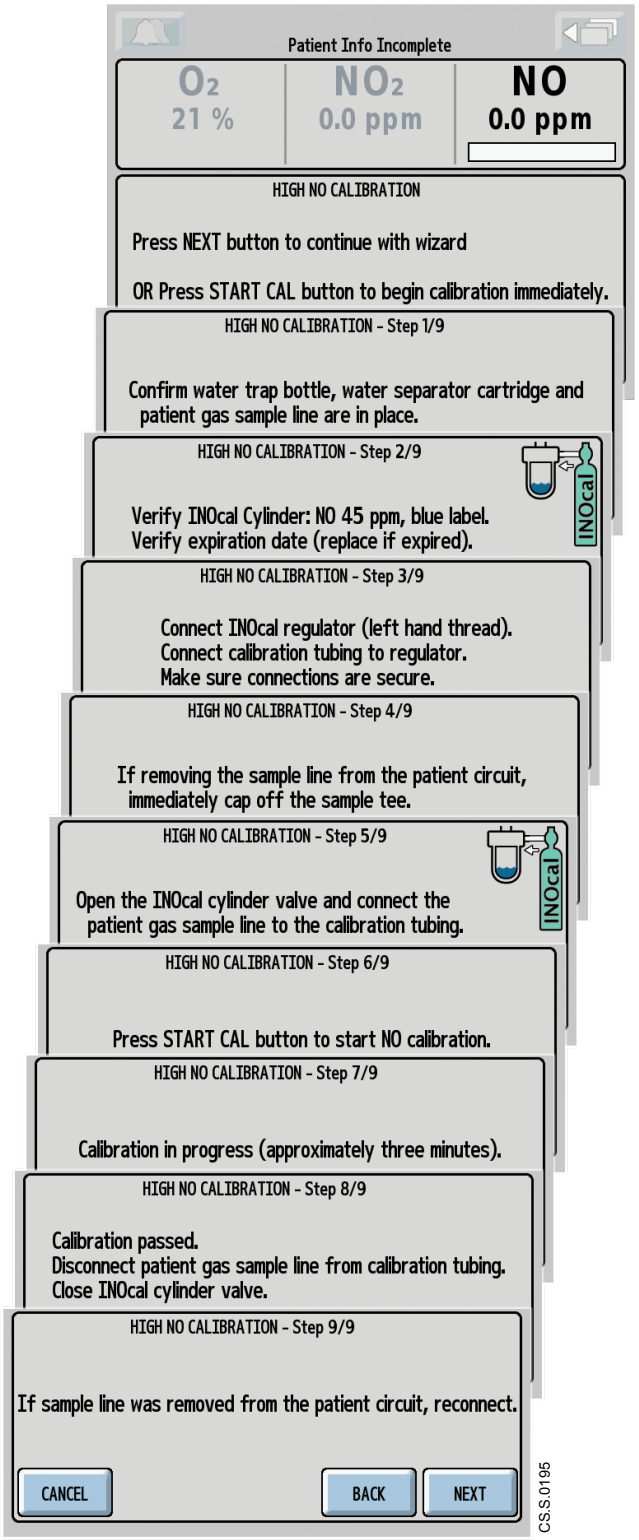

Figure 5-43 High NO Calibration Wizard, Screen Sequence

Mallinckrodt™ Pharmaceuticals

INOmax DS$_{IR}$® Plus

Maintaining the INOmax DS$_{IR}$ Plus

6/ Maintaining the INOmax DS$_{IR}$ Plus

Part No. 21204 Rev-03
2024-06

Mallinckrodt™ Pharmaceuticals

INOmax DS$_{IR}$® Plus

Maintaining the INOmax DS$_{IR}$ Plus

6/ Maintaining the INOmax DS$_{IR}$ Plus

Part No. 21204 Rev-03
2024-06

6 Maintaining the INOmax DS_{IR} Plus

This section details the required maintenance procedures for the INOmax DS_{IR} Plus, and the frequency in which the maintenance needs to occur.

6.1 Maintenance Overview

6.1.1 Manufacturer Preventive Maintenance

The manufacturer performs/recommends the following maintenance tasks every year:

- Replace O_2 and NO sensors.
- Perform full system check.

The manufacturer performs/recommends the following maintenance tasks every two years:

- Replace battery.
- Check internal tubing.
- Replace sample system tubing and filters.
- Perform full system check.
- Replace NO_2 sensor.

6.1.2 User Responsibility

Use this schedule to maintain the INOmax DS_{IR} Plus:

Table 6-1 INOmax DS_{IR} Plus User Schedule

Frequency	User Responsibility	Refer to Section
During Patient Use	Check the INOMAX cylinder pressure. A cylinder with less than 13.8 bar (200 psig) should be replaced.	*6.2 Changing INOMAX Cylinders*
	Empty the water bottle as needed.	*6.4 Emptying the Water Bottle*
	Replace the Water Separator Cartridge as needed.	*6.5 Replacing the Water Separator Cartridge*
	Replace Patient Gas Sample Line and Filter every 12 hours and as necessary.	*2.8 Attaching the Patient Gas Sample Line and Filter*
Start of Each Patient Use	Perform the Pre-Use Checkout (required).	*3.2 Automated Pre-Use Checkout* *Appendix A - Abbreviated Manual Pre-Use Checkout*
Between Patients	Clean the INOmax DS_{IR} Plus system components.	*6.6 Cleaning the INOmax DS_{IR} Plus System Components*
	Replace the single patient-use items.	*6.1.3 Single-Use Items*
	Always keep the power cord connected to an electrical outlet to maintain a full battery charge.	*6.7 Storing the INOmax DS_{IR} Plus*
Monthly	Perform a Low and a High calibration of the O_2, NO_2, and NO sensors.	*5. Calibrating Sensors*
	Check the INOMAX regulators for leaks.	*6.3 Detecting NO Gas Leaks*

NOTES:

- Make sure that the delivery system power cord is always plugged into an emergency-power-backed electrical outlet.
- Make sure the connectors, hoses, and cables are in good condition.
- If the hospital uses an equipotential grounding system, the system should be tested per chapter 4 of NFPA 99 or clause 5 of IEC 62353. Equipotential grounding is the bonding of all conductive surfaces in the room together and to earth. This can be implemented in the patient care environment if it is crucial to keep all conductive surfaces at the same electrical potential, or on the same ground plane.
- If the INOmax DS_{IR} Plus requires repair, contact Customer Support (see back cover).

WARNINGS

To help prevent fire, use only lubricants such as KRYTOX approved for use on O_2 equipment.

Do not use lubricants which contain oil or grease, as they burn or explode in high O_2 concentrations.

Do not sterilize or disinfect with the power connected.

6.1.3 Single-Use Items

WARNING

Do not attempt to reprocess or re-use single-use devices. This can lead to risk of cross-contamination, compromised functionality and bio-incompatibility.

A device that is categorized as single-use will have the following symbol (see Figure 6-1) on the packaging label:

A single-use device is intended for one use or for use on a single patient during a single procedure. Do not reuse. Single-use devices are not meant to be reprocessed and used again, even on the same patient.

Reprocessing single-use devices can lead to the following unsafe conditions:

- Cross-contamination due to the inability to clean and decontaminate due to design.
- Compromised functionality due to device failure from reprocessing or reuse because of fatigue, material alteration and embrittlement, leading to patient injury.
- Bio-incompatibility due to residues/toxins from chemical decontamination agents left on materials that can absorb chemicals.

Figure 6-1 Single-use device symbol

Reprocessing or reusing a single-use device may impact the safe performance of the INOmax DS_{IR} Plus.

6.2 Changing INOMAX Cylinders

WARNING

Do not start INOMAX drug delivery if cylinder pressure is less than 34.5 bar (500 psig). Replace the cylinder if pressure is less than 13.8 bar (200 psig). Using an INOMAX cylinder with low pressure can cause drug delivery to stop should the cylinder become depleted.

A new INOMAX cylinder and regulator must be purged before use to ensure the patient does not receive greater than 1.0 ppm of NO_2.

To replace an INOMAX cylinder:

1. Check the replacement INOMAX cylinder label for:
   - 800 ppm cylinder concentration.
   - Expiration date adequate to complete treatment.
2. Make sure that the regulator's white plastic tip is in place and is not chipped or cracked. If the tip is damaged, the regulator must be replaced. Contact Customer Support (see back cover) to arrange for a replacement.
3. Connect the regulator to the cylinder by rotating the regulator handle clockwise (see Figure 6-2) until tight. Hand-tighten only.

   NOTE: Do not attach the regulator hose to the INOmax DS_{IR} Plus at this time.
4. Open and close the cylinder valve by turning the cylinder valve handle counter-clockwise to open (Figure 6-3) and then clockwise to fully close.
5. Verify that the cylinder pressure gauge reads at least 34.5 bar (500 psig).
6. Monitor the gauge for about 30 seconds to see whether the pressure decreases.
   - If the pressure remains the same, the high pressure leak test is successful.
   - If the pressure decreases, fully close the cylinder valve handle, depressurize the regulator and repeat steps 4-6.
   - If the regulator continues to leak, follow the steps in *Section 6.3 Detecting NO Gas Leaks*.

Figure 6-2 Attaching an INOMAX regulator to a cylinder

Figure 6-3 Opening and closing the cylinder valve

7. At the back of the INOmax DS_{IR} Plus push the regulator hose connector into the purge port to depressurize the hose and regulator (see Figure 6-4).

8. When the regulator reads zero, remove the regulator hose from the purge port and connect it to the INOMAX gas inlet (Figure 6-5).

   If difficulty is encountered when connecting the regulator hose, refer to *Section 2.4 Attaching a Regulator Hose to the INOmax DS_{IR} Plus.*

9. Rotate the INOMAX cylinder valve handle at the top of the cylinder counter-clockwise until resistance to further movement is felt, indicating the valve is fully opened.

   This might trigger the **Two Cylinders Open** alarm until the valve on the empty INOMAX cylinder is closed.

NOTE: If the INOmax DS_{IR} Plus Transport Regulator/Cap Assembly is being used, transfer the cap from the exhausted INOMAX cylinder to the replacement INOMAX cylinder. The **Cylinder Not Detected** alarm might occur, refer to *Section 4.1.1 Using the Transport Regulator/Cap Assembly*.

Figure 6-4 Pressing a regulator hose connector to the purge port

Figure 6-5 Connecting a regulator hose to an INOMAX gas inlet

10. On the empty INOMAX cylinder, rotate the handle clockwise to fully close the INOMAX cylinder valve.

11. At the back of the INOmax DS_{IR} Plus, disconnect the regulator hose on the empty INOMAX cylinder and push the regulator hose connector into the purge port to depressurize the hose and regulator.

12. When the regulator reads zero, remove the regulator hose from the purge port.

13. Remove the regulator from the empty INOMAX cylinder and place it in the regulator storage well on the INOmax DS_{IR} Cart.

14. Unlatch the cylinder mounting strap and remove the cylinder from the Cart.

15. Load the replacement INOMAX cylinder onto the Cart, and securely latch the cylinder mounting strap.

6.3 Detecting NO Gas Leaks

If a leak is suspected during the High Pressure Leak Test, first inspect the cylinder regulator tip for damage.

6.3.1 Inspecting the INOMAX Cylinder Regulator Tip

1. Remove the regulator from the cylinder and visually inspect the regulator tip for chips, cracks or other damage (Figure 6-6).
2. If the tip appears to be undamaged, re-attach the regulator to the cylinder and continue with *Section 6.3.2* below.

   If the tip is damaged, the regulator must be replaced.

   Contact Customer Support (see back cover) to arrange for a replacement.

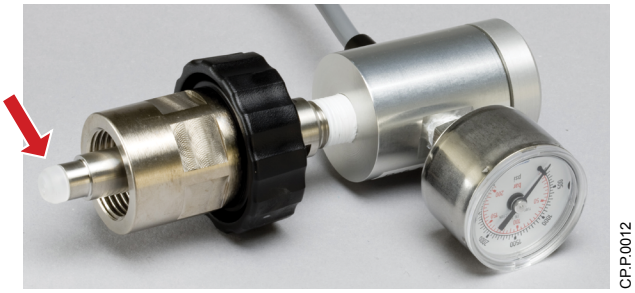

Figure 6-6 INOMAX cylinder regulator tip

6.3.2 Searching for NO Leak Locations

Confirm that the INOMAX regulator is connected to the cylinder valve outlet (firmly hand tighten only), that the cylinder valve is open and that the cylinder has more than 13.8 bar (200 psig). Then use the method below to locate the leak.

CAUTION

Do not use this method to detect leaks at the back of the INOmax DS_{IR} Plus. Soapy water coming in contact with electrical connections can cause damage to the INOmax DS_{IR} Plus.

1. Apply soapy water to cylinder connection points shown in Figure 6-7. If bubbles form, there is a leak.

Recommended Action:

- A leak detected at these points may not be repaired.
- Replace the INOMAX cylinder and contact technical support.

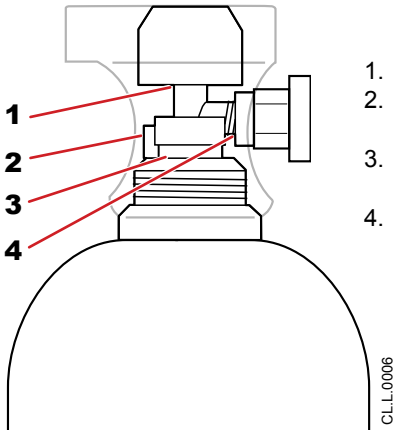

1. Valve Nut
2. Safety Pressure Release Device
3. Cylinder Valve to Cylinder Connection
4. Cylinder Valve Regulator Connection

Figure 6-7 Leak detection points on an INOMAX cylinder

2. Apply soapy water to the INOMAX regulator connection points shown in Figure 6-8. If bubbles form, there is a leak.

1. Regulator Fitting to Regulator Body
2. Pressure Gauge
3. Regulator End Cap
4. INOMAX Hose
5. Regulator Hand Wheel

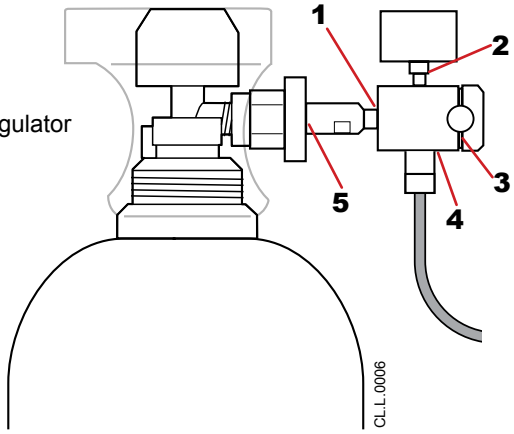

Figure 6-8 Leak detection points on an INOMAX regulator

Recommended Actions:

- If a leak is detected at points 1-4 replace the INOMAX regulator and contact Customer Support (see back cover).
- If a leak is detected at point 5 remove the regulator and check the regulator tip for chips or cracks (see *Section 6.3.1*).

6.4 Emptying the Water Bottle

WARNING
Dispose of the water bottle contents in accordance with universal precautions for contamination.

The water bottle collects fluids separated from the Patient Gas Sample Line and Filter.

NOTE: An alarm on the **Main screen** gives a reminder to empty the water bottle. This temporarily interrupts INOmax DS_{IR} Plus monitoring functions.

To empty the water bottle:

1. Pull the bottle straight down to remove it (see **1**, Figure 6-9).
2. Discard the contents.
3. Push the bottle up into position (**2**).

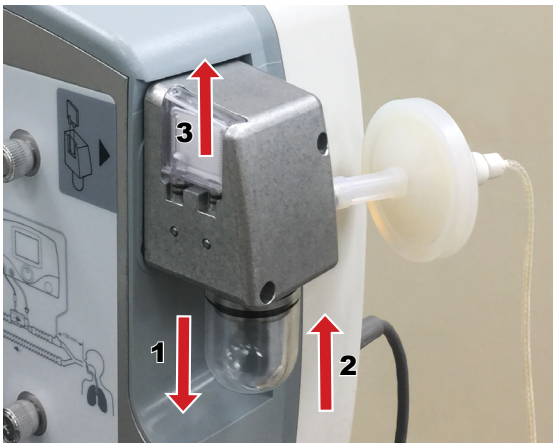

Figure 6-9 Removing/replacing Water Bottle and Water Separator Cartridge

6.5 Replacing the Water Separator Cartridge

WARNING
Dispose of the water separator cartridge in accordance with universal precautions for contamination.

The water separator cartridge protects the monitoring system from moisture and other contaminants. Replace the water separator cartridge before each patient use.

NOTE: Removing the water separator cartridge will interrupt patient monitoring.

To replace the water separator cartridge:

1. At the back of the sampling block:
   - Grasp the cartridge from its back and top edge.
   - Gently pull the cartridge up and out of the dovetail slot in the sampling block (see **3**, Figure 6-9).
2. Discard the used cartridge in a receptacle designated for medical waste.
3. Line up the replacement cartridge with the dovetail slot and push it into place until it seats properly.
4. To check for leaks occlude the Patient Gas Sample Line and Filter until the **Sample Line/Filter Block alarm message** appears.

   If the alarm does not activate there is a leak in the monitor system (contact Customer Support, see back cover).

6.6 Cleaning the INOmax DS_{IR} Plus System Components

This section provides procedures for cleaning the following INOmax DS_{IR} Plus components.

- INOmax DS_{IR} Plus
- INOmax DS_{IR} Cart
- INOmeter
- Water Bottle
- INOregulator

It also provides instructions for disinfecting and sterilizing the Injector Module.

For cleaning instructions for the INOblender, refer to the *INOblender Operation and Maintenance Manual*.

CAUTIONS

Do not use Bioquell Hydrogen Peroxide Sterilant to disinfect the device components. This product has not been tested and validated for cleaning/disinfection processes.

Bioquell Hydrogen Peroxide Sterilant and hydrogen peroxide vapor generators are regulated by the US Environmental Protection Agency (EPA) as pesticide chemicals in accordance with Federal Insecticide, Fungicide, and Rodenticide Act (FIFRA)

When the INOmax DS_{IR} Plus is cleaned:

- Do not autoclave or gas sterilize the device.
- Do not clean with the power connected.
- Do not spray or saturate the device with excessive cleaning solution. Liquid can flow into the system and damage internal components.
- Do not use the device until it is completely dry.

Do not spray alcohol in the Sample Line Inlet on the front of the device. Alcohol vapors cause the device NO_2 sensor to read high (as much as 6 ppm) and the device NO sensor to read low (approximately 0.5 to 1 ppm). As the alcohol dries, the monitored values stabilize.

NOTE: Use of unapproved cleaning or disinfecting agents may damage the device.

Table 6-2 Cleaning Agents that can be Used with the Injector Module

Cleaning Agent	Active Ingredients
pH neutral detergent and sterile water solution	Chlorhexidine gluconate (CHG), Chloroxylenol (PCMX), and Triclosan (e.g., Steris Prolystica 2X Concentrate Neutral Cleaner)
Ethyl or isopropyl alcohol (70%)	Alcohol

Table 6-3 Cleaning Agents that can be Used on Components Listed

Cleaning Agent	Active Ingredients
Pure Green 24 by Pure Green, LLC	SDC – silver ions 0.003% Citric acid 4.84%
PDI Super Sani Cloth by PDI	n-Alkyl (68% C12, 32% C14) dimethyl ethylbenzyl ammonium chlorides 0.25% n-Alkyl (60% C14, 30% C16, 5% C12, 5% C18) dimethyl benzyl ammonium chlorides 0.25% Isopropyl alcohol 55%
Sani Cloth HB by PDI	n-Alkyl (60% C14, 30% C16, 5% C12, 5% C18) dimethyl benzyl ammonium chlorides 0.07% n-Alkyl (68% C12, 32% C14) dimethyl ethylbenzyl ammonium chlorides 0.07%
Asepti-HB by Ecolab Inc.	n-Alkyl (60% C14, 30% C16, 5% C12, 5% C18) dimethyl benzyl ammonium chlorides 0.07% n-Alkyl (68% C12, 32% C14) dimethyl ethylbenzyl ammonium chlorides 0.07%

Table 6-4 High Level Disinfectant and Sterilization agent that can be used with the Injector Module

CAUTION
Refer to Sporox II instructions for use for a complete set of cautions, warnings and instructions prior to use.

Disinfecting Agent	Active Ingredients
Sporox II by Sultan Healthcare	Hydrogen peroxide (7.5%) Phosphoric acid (0.85%)

To Clean the External Surfaces of the Components, and the device Display:

WARNING

Do not sterilize or disinfect with the power connected.

NOTE: Always follow manufacturer recommendations, particularly for minimum contact time.

1. Disconnect electrical power to the device and turn it OFF prior to cleaning.

Clean:

2. Dampen a soft lint-free cloth (or use pre-moistened cloth) with any of the cleaning agents in Table 1-2.
3. Apply the cleaning agent using the moistened cloth in a circular motion to firmly contact all surfaces. Clean the device display first, followed by any remaining surfaces to remove organic or inorganic material.

Rinse:

4. Dampen a soft, lint-free cloth in sterile water (or use pre-moistened cloth) and wipe in a circular motion to firmly contact all surfaces.

Dry

5. Allow the device to air dry for at least 30 minutes at room temperature, or until completely dry.
6. Visually inspect to ensure that the surfaces are clean and intact.

Store

7. If required to store the device, refer to hospital policy.

6.6.1 Cleaning, Disinfecting and Sterilizing the Injector Module

WARNINGS

Do not use the Injector Module unless it is cleaned properly before and after each patient use to prevent cross-contamination. If the Injector Module was used in the wet/ humidified part of the breathing circuit, sterilize it between uses. The inspiratory side of an anesthesia circuit is considered wet/humidified.
Thoroughly rinse and dry the Injector Module after immersion to prevent patient contact with chemicals.

CAUTIONS

Do not insert anything into the Injector Module passage in an effort to remove contamination or to dry (see Figure 6-10). This will result in damage to the hot wire sensor.

The pre-use procedure is required to confirm the Injector Module is functioning properly and within specification before starting therapy on a patient.

Complete a visual inspection of the Injector Module prior to cleaning to determine potential damage, which would result in end of life for the Injector Module (e.g., unacceptable deterioration such as cracked NO inlet, damaged Injector Module housing, damaged electrical connection).

If an Injector Module does not pass a pre-use procedure, contact Customer Care or country manager for assistance. Do not attempt to reuse an Injector Module after it has demonstrated a failure.

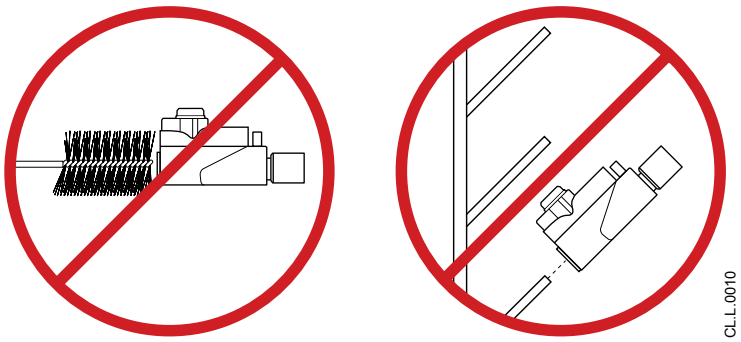

Figure 6-10 Do not insert anything in the Injector Module passage

To Clean the Injector Module with 70% Ethyl Alcohol or 70% Isopropyl Alcohol:

NOTES:

- Always follow manufacturer recommendations, particularly for minimum contact time.
- A typical life of the injector module is 30 sterilization cycles. The pre-use procedure is required to confirm the injector module is functioning properly and within specification before starting therapy on a patient.

1. Disconnect the electrical cable and the injector tube from the Injector Module before cleaning.

Clean:

2. Dampen a soft lint-free cloth (or use pre-moistened cloth) with sterile water and pH neutral detergent (e.g., Steris Prolystica 2X Concentrate Neutral Cleaner).
3. Apply the cleaning agent using the moistened cloth in a circular motion to firmly contact all surfaces of the Injector Module.
4. Clean all external surfaces of the Injector Module to remove organic or inorganic material.
5. Fill a container with 70% alcohol (sufficient volume to completely submerge the Injector Module).
6. Totally submerge the Injector Module in the alcohol for at least 30 minutes.
   NOTE: If lint or fibers are attached to the hot wire sensor, gently agitate the module to move the alcohol through the module openings (see Figure 6-11).

Rinse: Not required

Dry:

7. Remove the Injector Module from the container and drain the excess alcohol from the module's electrical connector, injector port and internal passage (see Figure 6-12).
8. Allow the Injector Module to air dry for at least 30 minutes at room temperature, or until completely dry.
9. Visually inspect to ensure that the surfaces are clean and intact.
10. Ensure proper function prior to patient use by completing the Pre-Use Checkout.

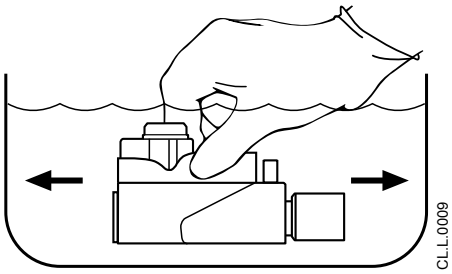

Figure 6-11 Agitating/rinsing the submerged Injector Module

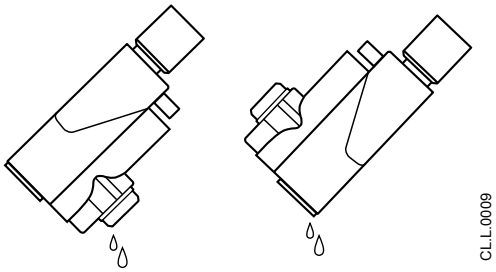

Figure 6-12 Positioning Injector Module to facilitate air-drying

To Disinfect the Injector Module with Sporox II:

Refer to Sporox II instructions for use for a complete set of cautions, warnings and instructions prior to use.

NOTE: Always follow manufacturer recommendations, particularly for minimum contact time.

1. Disconnect the electrical cable and the injector tube from the Injector Module before cleaning.

Clean:

2. Dampen a soft lint-free cloth (or use pre-moistened cloth) with sterile water and pH neutral detergent (e.g., Steris Prolystica 2X Concentrate Neutral Cleaner).
3. Apply the cleaning agent using the moistened cloth in a circular motion to firmly contact all surfaces of the Injector Module.
4. Clean all external surfaces to remove organic or inorganic material.
5. Fill a container with fresh, sterile water (sufficient volume to completely submerge the Injector Module).
6. Rinse off the cleaning agent by totally submerging the Injector Module in the sterile water and gently agitating the Module to move the water through the openings (see Figure 6-11).
7. Allow the Injector Module to air dry for at least 30 minutes at room temperature, or until completely dry.

Disinfect:

8. Fill a second container with Sporox II. Do not dilute the solution with water.
9. Affix a label to the Sporox II container. Write on the label the date the solution will expire (21 days after filling the container).
10. Totally submerge the Injector Module in the Sporox II for at least 30 minutes at 20 °C to disinfect (see Figure 6-13).

    NOTE: If lint or fibers are attached to the hot wire sensor, gently agitate the module to move the alcohol through the module openings (see Figure 6-11).

Rinse:

11. Fill a container with fresh sterile water.
12. Gently agitate the module to move the sterile water through the module openings. A 70% isopropyl alcohol rinse may follow a water rinse to facilitate the drying process.

Dry:

13. Remove the Injector Module from the water or alcohol container and drain the excess fluid from the module's electrical connector, injector port and internal passage (see Figure 6-12).
14. Allow to air dry for at least 30 minutes at room temperature, or until completely dry.
15. Ensure proper function prior to patient use by completing a Pre-Use Checkout.

To Sterilize the Injector Module with Sporox II:

WARNING

If the Injector Module was used in the wet/humidified part of the breathing circuit, sterilize it between uses. The inspiratory side of an anesthesia circuit is considered wet/humidified.

Refer to Sporox II instructions for use for a complete set of cautions, warnings and instructions prior to use. Always follow manufacturer recommendations, particularly for minimum contact time.

1. Disconnect the electrical cable and the injector tube from the Injector Module before cleaning.

Clean:

2. Dampen a soft lint-free cloth (or use pre-moistened cloth) with sterile water and pH neutral detergent (e.g., Steris Prolystica 2X Concentrate Neutral Cleaner).
3. Apply the cleaning agent using the moistened cloth in a circular motion to firmly contact all surfaces of the Injector Module.
4. Clean all external surfaces to remove organic or inorganic material.
5. Fill a container with fresh, sterile water.
6. Rinse off the cleaning agent by totally submerging the Injector Module in the sterile water and gently agitating the module to move the water through the openings (see Figure 6-11).
7. Allow the Injector Module to air dry for at least 30 minutes at room temperature, or until completely dry.

Sterilize:

8. Fill a second container with Sporox II. Do not dilute the solution with water.
9. Affix a label to the Sporox II container. Write on the label the date the solution will expire (21 days after filling the container).
10. Totally submerge the Injector Module in the Sporox II for at least 6 hours at 20 °C to sterilize (see Figure 6-13).

    NOTE: If lint or fibers are attached to the hot wire sensor, gently agitate the module to move the alcohol through the module openings (see Figure 6-11).

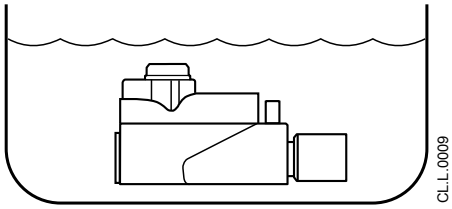

Figure 6-13 Soaking the Injector Module in Sporox II

Rinse:

11. Fill a container with fresh sterile water.
12. Gently agitate the module to move the sterile water through the module openings. A 70% isopropyl alcohol rinse may follow a water rinse to facilitate the drying process.

Dry:

13. Remove the Injector Module from the water or alcohol container and drain the excess fluid from the module's electrical connector, injector port and internal passage (see Figure 6-12).
14. Allow to air dry for at least 30 minutes at room temperature, or until completely dry.
15. Ensure proper function prior to patient use by completing a Pre-Use Checkout.

To Sterilize the Injector Module by Steam Autoclave with Dynamic Air Removal Cycle:

1. Disconnect the electrical cable and the injector tube from the Injector Module before cleaning.

Clean:

2. Dampen a soft lint-free cloth (or use pre-moistened cloth) with sterile water and pH neutral detergent (e.g., Steris Prolystica 2X Concentrate Neutral Cleaner).
3. Apply the cleaning agent using the moistened cloth in a circular motion to firmly contact all surfaces of the Injector Module.
4. Clean all external surfaces to remove organic or inorganic material.
5. Fill a container with fresh, sterile water.
6. Rinse off the cleaning agent by totally submerging the Injector Module in the sterile water and gently agitating the module to move the water through the openings (see Figure 6-11).
7. Allow the Injector Module to air dry for at least 30 minutes at room temperature, or until completely dry.

Sterilize:

8. Autoclave the Injector Module at 134 degrees C for three minutes, or at 132 degrees C for four minutes.
9. Visually inspect to ensure that the surfaces are clean and intact.
10. Ensure proper function prior to patient use by completing the Performance Test.

Rinse: Not required

Dry: Not required

Cleaning the Water Bottle

WARNING

Dispose of the Water Bottle contents in accordance with universal precautions for contamination.

CAUTION

If alcohol is used to clean the Water Bottle, ensure the alcohol completely evaporates before the Water Bottle is put back in place. Alcohol vapors cause the device NO_2 sensor to read high (as much as 6 ppm) and the NO sensor to read low (approximately 0.5 to 1 ppm). As the alcohol dries, the monitored values stabilize.

1. Remove the Water Bottle from the device by pulling it straight down (see Figure 6-14).
2. Discard the contents (see Warning above).

Clean:

3. Dampen a soft lint-free cloth (or use pre-moistened cloth) with any of the cleaning agents in Table 6-3.
4. Apply the cleaning agent using the moistened cloth in a circular motion to firmly contact all surfaces of the Water Bottle.

5. Clean all internal and external surfaces to remove organic or inorganic material.
6. Fill a container with fresh, sterile water.
7. Rinse off the cleaning agent by totally submerging the Water Bottle in the sterile water and gently agitating the Water Bottle to move the water over the surfaces.
8. Allow the Water Bottle to air dry for at least 30 minutes at room temperature, or until completely dry.
9. Visually inspect to ensure that the surfaces are clean and intact.

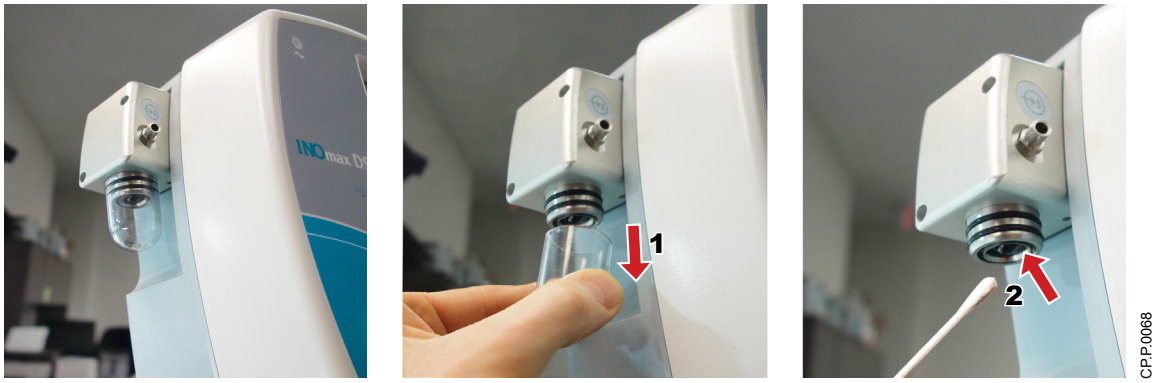

Figure 6-14 Removing Water Bottle to clean Bottle and Optical Sensor

To clean the optical sensor:

CAUTION
If alcohol is used to clean the Optical Sensor, ensure the alcohol completely evaporates before the Water Bottle is put back in place. Alcohol vapors cause the device NO_2 sensor to read high (as much as 6 ppm) and the NO sensor to read low (approximately 0.5 to 1 ppm). As the alcohol dries, the monitored values stabilize.

1. Remove the Water Bottle from the device by pulling it straight down (see Figure 6-14).
2. Discard the contents (see Warning above under *Cleaning the Water Bottle*).

Clean:

3. Dampen a Q-tip with sterile water and pH neutral detergent (e.g., Steris Prolystica 2X Concentrate Neutral Cleaner).
4. Apply ethyl or isopropyl alcohol using the Q-tip in a circular motion to firmly contact all surfaces of the Optical Sensor.
5. Clean all external surfaces to remove organic or inorganic material.
6. Allow the Optical Sensor to air dry for at least 30 minutes at room temperature, or until completely dry.
7. Visually inspect to ensure that the surface is clean and intact.
8. Re-install the clean water bottle.

6.6.2 Cleaning the INOmeter

Clean:

1. Dampen a soft lint-free cloth with sterile water and pH neutral detergent (e.g., Steris Prolystica 2X Concentrate Neutral Cleaner) or with one of the cleaning agents listed in *Table 6.2*.
2. Wipe outer surfaces of the INOmeter to remove organic or inorganic material.

Disinfect:

3. Dampen a soft, lint-free cloth with one of the cleaning agents in *Table 6.3* and wipe the INOmeter surface to disinfect.

Rinse: Not required

Dry:

4. Allow to air dry for at least 30 minutes or until completely dry.
5. Visually inspect to ensure that the surfaces are clean and intact.

6.7 Storing the INOmax DS_{IR} Plus

The following are recommendations for storing the INOmax DS_{IR} Plus system:

- Connect power cord to AC mains outlet and switch the INOmax DS_{IR} Plus to standby.
- Store the INOmax DS_{IR} Plus at recommended operating temperature range (5-40 degrees C) and humidity level (15 to 95% RH non condensing).
- Apply dust cover to maintain cleanliness (see Figure 6-15).

Figure 6-15 Storing the DS_{IR} Plus under a dust cover

6.8 Replacing O_2, NO_2, and NO Sensors

WARNING
Do not incinerate sensors. Handle and dispose of sensors according to facility biohazard policies.

Sensors contain electrolyte that can be corrosive to skin and metal if leaking occurs.

NOTE: The manufacturer recommends changing sensors only when the device is not in use, and only when instructed to do so by Customer Support (see back cover).

To replace an O_2, NO_2, or NO sensor:

1. At the back of the INOmax DS_{IR} Plus, remove the sensor cover by turning the sensor cover screws counter-clockwise until they spin freely (**1**, Figure 6-16). Then grasp both screws firmly and pull the cover straight out.
2. Identify the sensor to be replaced, grasp the sensor on two sides and gently pull it from its socket (**2**, Figure 6-16).

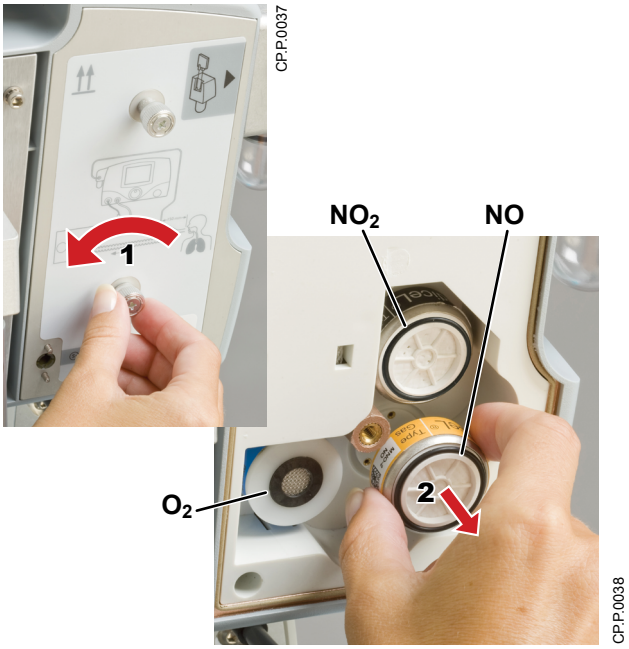

Figure 6-16 Removing sensor cover (left) and sensor (right)

NOTE: If the NO_2 sensor is being replaced, remove the shorting wire from the new sensor before installing it (Figure 6-17).

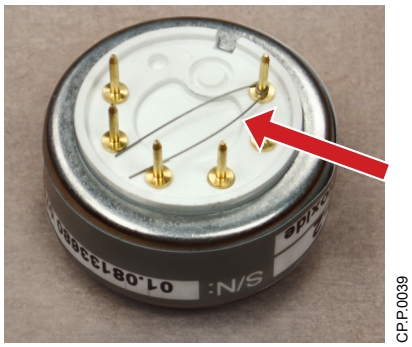

Figure 6-17 NO_2 sensor showing connector pins and a shorting wire

3. Install the replacement sensor:
   - Check that the O-ring is present and seated properly on the replacement sensor (Figure 6-18).
   - For NO and NO_2 sensors, carefully align the pins with the pin-sockets and press the sensor into place.

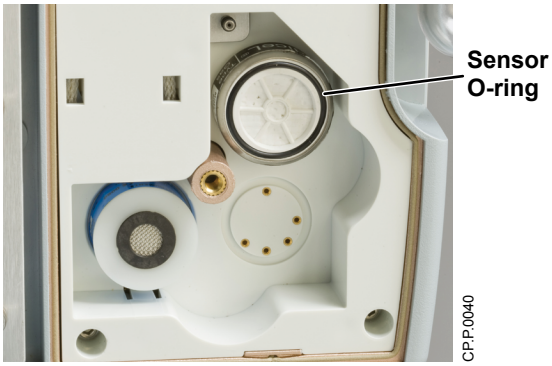

Figure 6-18 Beneath Sensor Cover, NO_2 sensor removed

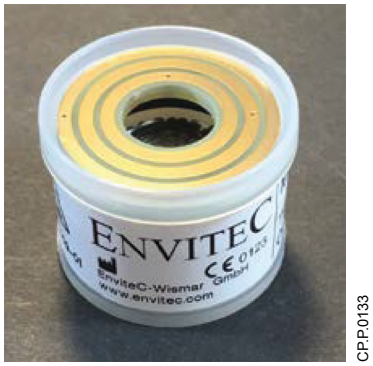

Figure 6-19 O_2 sensor

   - After removing the O_2 sensor from the package, insert the O_2 sensor, contact-end first, into the device.

4. Verify that on the reverse side of the sensor cover, all three sensor gaskets are seated in their respective gasket grooves (see Figure 6-20).

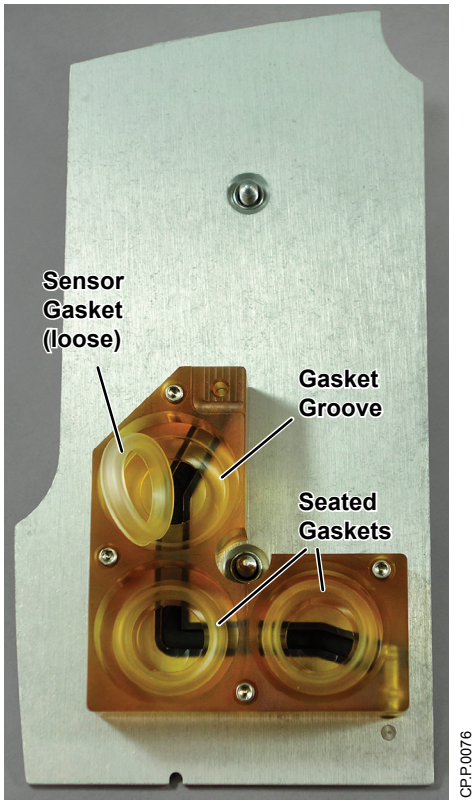

Figure 6-20 Reverse side of sensor cover

5. Replace the sensor cover and tighten the two screws clockwise until the cover is secure (see Figure 6-21).
6. Allow time for the new sensor to condition prior to calibrating.

Table 6-5 Sensor Conditioning Time

Newly Installed Sensor	Minimum Time to Condition Prior to Calibration
O_2 and NO_2	40 minutes
NO	5 hours

7. Prior to using the INOmax DS_{IR} Plus, perform a Low and High Calibration for the replaced sensor. For detailed information, refer to *Chapter 5, Calibrating Sensors*.

Figure 6-21 Tightening sensor cover screws

NOTE: Insufficient conditioning, and lack of calibration will result in inaccurate gas readings.

6.9 Returning the INOmax DS_{IR} Plus for Service

Customer Support must be contacted prior to returning the INOmax DS_{IR} Plus.

If the INOmax DS_{IR} Plus must be returned:

- Remove and return the Injector Module and Injector Module cable with INOmax DS_{IR} Plus.
- Remove and discard the Patient Gas Sample Line and Filter, the water separator cartridge and the NO/N_2 injector tubing.
- Clean the INOmax DS_{IR} Plus and components according to *Section 6.6*.
- Return to the location specified by Customer Support.

Mallinckrodt™ Pharmaceuticals

INOmax DS IR® Plus

Troubleshooting and Alarms

7/ Troubleshooting and Alarms

Part No. 21204 Rev-03
2024-06

Mallinckrodt™ Pharmaceuticals

INOmax DS$_{IR}$® Plus

Troubleshooting and Alarms

7/ Troubleshooting and Alarms

Part No. 21204 Rev-03
2024-06

7 Troubleshooting and Alarms

WARNINGS

Do not interrupt INOMAX delivery while troubleshooting the INOmax DS_{IR} Plus delivery system.

If INOMAX delivery is interrupted, switch the patient to a backup delivery system before proceeding with troubleshooting.

Replace the delivery system if necessary.

Use caution performing procedures while the INOmax DS_{IR} Plus is in use. If possible, perform troubleshooting procedures after transferring the patient to a backup system.

Troubleshooting prior to patient use:

- Verify that the system was set up as detailed in the Automated Pre-use Checkout.
- If the problem is not resolved, contact Customer Support (refer to the back cover of this manual).

Troubleshooting while in use with patient:

- Check the patient condition and take appropriate action.
- Use the INOblender (refer to the *INOblender Operation and Maintenance Manual*) or Integrated Pneumatic Backup if necessary.
- Select the **Alarm Help button** and follow the instructions (see Section 7.1 below) or refer to the alarm listings in *Section 7.2 Identifying and Resolving Alarms* for recommended actions to resolve the alarm.
- If the problem is not resolved, contact Customer Support (refer to the back cover of this manual).

7.1 Displaying Alarm Help

To activate on-screen help and use troubleshooting wizards, select the **Alarm Help button** on the **Main screen** (see Figure 7-1) and follow the instructions.

The **Alarm Help button** is accessible only when there is an active alarm.

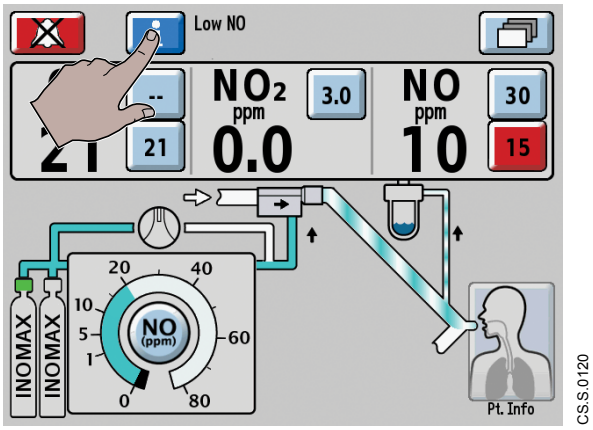

Figure 7-1 Main Screen alarming for Low NO

7.2 Identifying and Resolving Alarms

WARNINGS

If an alarm occurs, always safeguard the patient first before performing troubleshooting or repair procedures.

Do not interrupt INOMAX delivery while troubleshooting the INOmax DS_{IR} Plus delivery system.

Abrupt discontinuation of INOMAX can lead to worsening oxygenation and increasing pulmonary artery pressure, i.e., Rebound Pulmonary Hypertension Syndrome (refer to the INOMAX package insert). To avoid abrupt discontinuation, use the INOblender as a manual backup or Integrated Pneumatic Backup immediately to reinstate INOMAX therapy.

Do not discontinue INOMAX delivery if the high NO_2 alarm activates. Assess the delivery system for proper set up while maintaining INOMAX delivery, and adjust INOMAX and/or FiO_2 as appropriate. Refer to the INOMAX package insert for details on the effects of NO_2. If the cause of increased NO_2 levels cannot be determined, contact Customer Support.

Table 7-1 Continuous Audible Tone Table

Continuous Audible Tone		
Alarm	**Possible Cause**	**Recommended Action**
Continuous Audible Tone from the INOmax DS_{IR} Plus	A component within the INOmax DS_{IR} Plus has failed.	1. If the INOblender is available, manually ventilate the patient (see INOblender Operation Manual). 2. Replace the delivery system and remove from service. 3. Contact Customer Support (see back cover).

Table 7-2 High Priority Alarms Table

High Priority Alarms All of these actions can be performed while delivering INOMAX to the patient			
Alarm	**Possible Cause**	**Recommended Action**	**Reference**
1. High NO High NO CS.S.0009	The **High NO Alarm Limit** may be inappropriately set.	1. Confirm **High NO Alarm Limit** set appropriately. 2. Contact Customer Support (see back cover).	1.7.3
	Circuit setup incorrect.	1. Check circuit for correct setup. 2. Contact Customer Support (see back cover).	3.3.1, 3.3.5
	The NO calibration may have drifted.	1. Perform Low Calibration. 2. Perform High NO calibration. 3. Contact Customer Support (see back cover).	Chapter 5
	Injector Module may not be functioning properly.	First: Manually ventilate patient with the INOblender. OR Turn Integrated Pneumatic Backup ON. Then: 1. Replace the Injector Module (INOMAX delivery will be interrupted). 2. Replace the Injector Module cable (INOMAX delivery will be interrupted). 3. Contact Customer Support (see back cover).	3.3.3 3.3.4

High Priority Alarms All of these actions can be performed while delivering INOMAX to the patient			
Alarm	**Possible Cause**	**Recommended Action**	**Reference**
2. Low NO CS.S.0012	The **Low NO Alarm Limit** may be inappropriately set.	1. Confirm **Low NO Alarm Limit** is set appropriately. 2. Contact Customer Support (see back cover).	1.7.3
	Circuit setup incorrect.	1. Check circuit for correct setup. 2. Contact Customer Support (see back cover).	Chapter 2
	Water separation cartridge missing or loose.	1. Replace/secure water separator cartridge. 2. Contact Customer Support (see back cover).	6.5
	Water bottle missing.	1. Replace water bottle. 2. Contact Customer Support (see back cover).	6.4
	NO/N_2 Injector Tube connection loose.	1. Check Injector Module Tubing Outlet and Injector Module connections. 2. Contact Customer Support (see back cover).	2.6
	Patient Gas Sample Line and Filter connection loose.	1. Tighten Patient Gas Sample Line and Filter connection. 2. Contact Customer Support (see back cover).	2.8
	Loss of NO delivery.	1. If loss of NO delivery is suspected: Manually ventilate patient with the INOblender. OR Turn Integrated Pneumatic Backup ON. 2. Contact Customer Support (see back cover).	3.3.3 3.3.4
	The NO calibration may have drifted.	1. Perform Low Calibration 2. Perform High NO Calibration. 3. Contact Customer Support (see back cover).	Chapter 5
	Injector Module may not be functioning properly.	First: Manually ventilate patient with the INOblender. OR Turn Integrated Pneumatic Backup ON. Then: 1. Replace the Injector Module (INOMAX delivery will be interrupted). 2. Replace the Injector Module cable (INOMAX delivery will be interrupted). 3. Contact Customer Support (see back cover).	3.3.3 3.3.4 2.6
	The NO sensor may not be properly seated.	1. Confirm the O-rings on the sensor and gaskets on the sensor cover are correctly seated and the sensor cover is fully closed. 2. Contact Customer Support (see back cover).	6.8

High Priority Alarms All of these actions can be performed while delivering INOMAX to the patient, with the exception of a purge procedure.			
Alarm	**Possible Cause**	**Recommended Action**	**Reference**
3. High NO_2 High NO_2 CS.S.0010	Incomplete System purge.	1. Verify device has been purged. If the purge has not been done, perform the purge procedure. 2. Contact Customer Support (see back cover).	3.2.2
	The **High NO_2 Alarm Limit** may be inappropriately set.	1. Confirm **High NO_2 Alarm Limit** is set appropriately. 2. Contact Customer Support (see back cover).	1.7.3
	Two cylinder valves are open.	1. If two cylinder valves are open, close one cylinder valve. 2. Contact Customer Support (see back cover).	-
	Circuit setup incorrect.	1. Check circuit for correct setup, and that gas source is correct. 2. Contact Customer Support (see back cover).	3.3.1, 3.3.5
	Patient circuit flow interrupted.	1. Ensure circuit flow meets minimum specification for the INOmax DS_{IR} Plus. 2. Contact Customer Support (see back cover).	-
	Monitored NO_2 value is too high.	1. Consider reducing the INOMAX dose according to INOMAX prescribing information. 2. Contact Customer Support (see back cover).	1.7.2
	The NO_2 calibration may have drifted.	1. Perform Low Calibration. 2. Perform High NO_2 Calibration. 3. Contact Customer Support (see back cover).	Chapter 5
4. High O_2 High O_2 CS.S.0011	The **High O_2 Alarm Limit** may be inappropriately set.	1. Confirm **High O_2 Alarm Limit** is set appropriately. 2. Contact Customer Support (see back cover).	1.7.3
	Circuit setup incorrect.	1. Check circuit for correct setup, and that gas source is correct. 2. Contact Customer Support (see back cover).	3.3.1, 3.3.5
	The O_2 calibration may have drifted.	1. Perform Low Calibration. 2. Perform High O_2 Calibration. 3. Contact Customer Support (see back cover).	Chapter 5

High Priority Alarms All of these actions can be performed while delivering INOMAX to the patient			
Alarm	**Possible Cause**	**Recommended Action**	**Reference**
5. Low O_2 CS.S.0013	The **Low O_2 Alarm Limit** may be inappropriately set.	1. Confirm **Low O_2 Alarm Limit** is set appropriately. 2. Contact Customer Support (see back cover).	1.7.3
	Circuit setup incorrect.	1. Check circuit and gas source for correct setup. 2. Contact Customer Support (see back cover).	3.3.1, 3.3.5
	The O_2 calibration may have drifted.	1. Perform Low Calibration. 2. Perform High O_2 Calibration. 3. Contact Customer Support (see back cover).	Chapter 5
	Water separation cartridge missing or loose.	1. Replace/secure water separator cartridge. 2. Contact Customer Support (see back cover).	6.5
	Water bottle missing.	1. Replace water bottle. 2. Contact Customer Support (see back cover).	6.4
	Patient Gas Sample Line and Filter connection loose.	1. Tighten Patient Gas Sample Line and Filter connection. 2. Contact Customer Support (see back cover).	2.8
	The O_2 sensor may not be properly seated.	1. Confirm sensors and sensor gaskets are correctly seated and sensor cover is fully closed. 2. Contact Customer Support (see back cover).	6.8

High Priority Alarms All of these actions can be performed while delivering INOMAX to the patient			
Alarm	**Possible Cause**	**Recommended Action**	**Reference**
6. Cylinder Not Detected 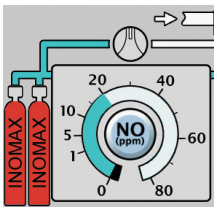 CS.S.0014 **WARNING** **Delivery Stopped will occur one hour from point when cylinder alarm is activated.**	INOmax DS_{IR} Plus infrared Cart cable is not connected or has failed.	1. Disconnect and reconnect the infrared Cart cable on the back of the INOmax DS_{IR} Plus. 2. Contact Customer Support (see back cover).	2.2 Step 1
	IR interference.	1. Reposition/rotate INOmax DS_{IR} Cart. 2. Remove any obstacle between INOmeter and Cart sensor. 3. Move interfering light source. 4. Shield the INOmeter from the suspect light source. 5. Contact Customer Support (see back cover).	1.5.6
	INOmeter may have failed.	1. Replace INOMAX cylinder on Cart. 2. Contact Customer Support (see back cover).	6.2
	Transport Cap issue.	If using a Transport Regulator/Cap Assembly: 1. Connect Assembly cable to infrared connector on back of INOmax DS_{IR} Plus. 2. Confirm Transport Regulator/Cap Assembly cap is properly positioned on the INOmeter. 3. Replace Transport Regulator/Cap Assembly. 4. Replace INOMAX cylinder. 5. Contact Customer Support (see back cover).	4.1.1 6.2

High Priority Alarms All of these actions can be performed while delivering INOMAX to the patient			
Alarm	**Possible Cause**	**Recommended Action**	**Reference**
7. Cylinder Valve Closed 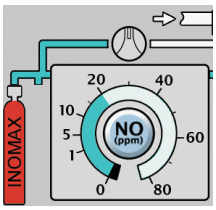 CS.S.0015 **WARNING** **Delivery Stopped will occur one hour from point when cylinder alarm is activated.**	INOMAX cylinder valve is closed.	1. Confirm the INOMAX cylinder valve is fully open. 2. Contact Customer Support (see back cover).	-
	When two cylinders are present on the Cart, the open cylinder may not be visible to the IR system due to interference or obstruction.	1. Reposition/rotate INOmax DS_{IR} Cart. 2. Remove any obstacle between INOmeter and Cart. 3. Contact Customer Support (see back cover).	1.5.6
	INOmeter may have failed.	1. Replace INOMAX cylinder on Cart. 2. Contact Customer Support (see back cover).	6.2
	The IR transceiver in the Cart cover may have failed.	Contact Customer Support (see back cover).	NA

High Priority Alarms All of these actions can be performed while delivering INOMAX to the patient			
Alarm	**Possible Cause**	**Recommended Action**	**Reference**
8. Delivery Failure 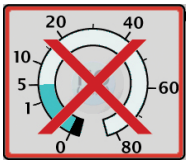 CS.S.0016 **WARNING** **INOMAX delivery has been interrupted.**	Over-delivery of INOMAX or internal error has been detected. - (CALCULATED dose is >200% of set dose) AND (CALCULATED dose is > set dose + 10 ppm) for 12 consecutive seconds, or - CALCULATED dose > 100 for 12 seconds.	This alarm condition requires follow-up service evaluation. If it occurs while the system is in use: 1. Manually ventilate patient with the INOblender. OR Turn Integrated Pneumatic Backup ON. 2. Replace the INOmax DS_{IR} Plus with a functioning one. If the alarm occurs prior to use, remove the INOmax DS_{IR} Plus from service. In either case, contact Contact Customer Support (see back cover) for a replacement.	3.3.3 3.3.4
9. Delivery Stopped 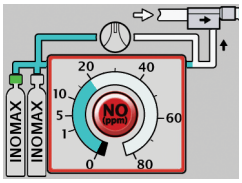 CS.S.0017 **WARNING** **INOMAX delivery has been interrupted.**	MONITORED NO > 100 ppm for at least 12 seconds.	1. Manually ventilate patient with the INOblender. OR Turn Integrated Pneumatic Backup ON. 2. Contact Customer Support (see back cover).	3.3.3 3.3.4
	Drug past expiry date.	1. Replace INOMAX cylinder. 2. Contact Customer Support (see back cover).	6.2
	Drug concentration mismatch.	1. Replace INOMAX cylinder. 2. Contact Customer Support (see back cover).	6.2
	INOmeter may have failed.	1. Replace INOMAX cylinder. 2. Contact Customer Support (see back cover).	6.2
	INOMAX cylinder valve is closed.	1. Confirm the INOMAX cylinder valve is fully open. 2. Contact Customer Support (see back cover).	-
	INOMAX cylinder is not detected.	1. Replace INOMAX cylinder. 2. Contact Customer Support (see back cover).	6.2

High Priority Alarms All of these actions can be performed while delivering INOMAX to the patient			
Alarm	**Possible Cause**	**Recommended Action**	**Reference**
10. Drug Past Expiry Date 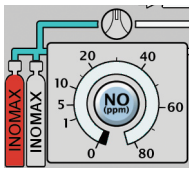 CS.S.0018 **WARNING** **Delivery Stopped will occur two minutes after the expired cylinder valve is opened.**	INOMAX cylinder is expired. **NOTE:** The INOmax DS_{IR} Plus recognizes the drug as expired on the last day of the month listed on the INOMAX cylinder label.	1. Replace expired INOMAX cylinder with unexpired INOMAX cylinder. 2. Connect an INOMAX cylinder with an expiration date several days in the future. 3. Contact Customer Support (see back cover).	6.2
11. Drug Concentration Mismatch 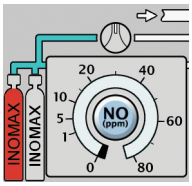 CS.S.0018 **WARNING** **Delivery Stopped will occur two minutes after the wrong concentration cylinder valve is opened.**	INOMAX cylinder is the wrong concentration.	1. Replace the wrong concentration INOMAX cylinder with a cylinder with the correct concentration. 2. Connect an INOMAX cylinder to INOmax DS_{IR} Plus with a valid concentration. 3. Contact Customer Support (see back cover).	6.2

High Priority Alarms All of these actions can be performed while delivering INOMAX to the patient			
Alarm	**Possible Cause**	**Recommended Action**	**Reference**
12. Injector Module Fail 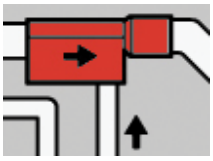 CS.S.0019 **WARNING** **INOMAX delivery has been interrupted.**	Patient circuit flow measurement has failed.	1. Manually ventilate patient with the INOblender. OR Turn Integrated Pneumatic Backup ON. 2. Contact Customer Support (see back cover).	3.3.3 3.3.4
	The Injector Module electrical cable may be disconnected.	1. Disconnect and reconnect both ends of the Injector Module cable. 2. Contact Customer Support (see back cover).	2.6
	The Injector Module may have failed.	1. Replace the Injector Module (INOMAX delivery will be interrupted). 2. Contact Customer Support (see back cover).	2.6
	The Injector Module electrical cable may have failed.	1. Replace the Injector Module cable (INOMAX delivery will be interrupted). 2. Contact Customer Support (see back cover).	2.6
13. Low Battery CS.S.0020	Battery is running low. Up to 30 minutes of battery life remains following **Low Battery alarm** activation.	1. Check AC power connection at wall and/ or back of INOmax DS_{IR} Plus (green indicator light should be illuminated). 2. Contact Customer Support (see back cover).	4.6.2

High Priority Alarms All of these actions can be performed while delivering INOMAX to the patient			
Alarm	**Possible Cause**	**Recommended Action**	**Reference**
14. Low Cylinder Pressure 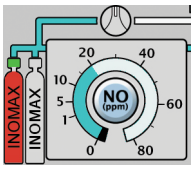 CS.S.0021	Cylinder valve is closed.	1. Confirm INOMAX cylinder valve is fully open. 2. Contact Customer Support (see back cover).	-
	The regulator hose may not be connected.	1. Confirm correct INOMAX regulator hose is connected. 2. Contact Customer Support (see back cover).	6.2
	The INOMAX cylinder supply may be low.	1. Check the INOMAX regulator gauge pressure, replace the cylinder if necessary. 2. Contact Customer Support (see back cover).	6.2
	INOmax DS_{IR} Plus has developed an internal leak.	1. Bypass the INOmax DS_{IR} Plus and connect the INOblender directly to the INOMAX regulator. 2. Verify adequate cylinder pressure. 3. Contact Customer Support (see back cover).	3.3.3
15. Service Required 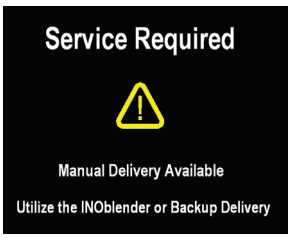 CS.S.0082 Manual Delivery Available Utilize the INOblender or Integrated Pneumatic Backup delivery	The INOmax DS_{IR} Plus has failed.	First: Manually ventilate patient with the INOblender. Then: 1. If this occurs while the system is in use, replace the INOmax DS_{IR} Plus with a functioning one. 2. If the alarm occurs prior to use, remove the INOmax DS_{IR} Plus from service. 3. Contact Customer Support (see back cover).	3.3.3 3.3.4

Table 7-3 Low Priority Alarms Table

Low Priority Alarms All of these actions can be performed while delivering INOMAX to the patient			
Alarm	**Possible Cause**	**Recommended Action**	**Reference**
16. Backup On 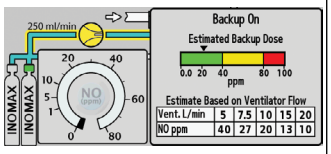 CS.S.0023	The backup mode has been turned ON.	1. Correct the reason for initiating Integrated Pneumatic Backup. 2. Turn Integrated Pneumatic Backup OFF and confirm set NO dose and monitor alarm settings have been restored to previously set values. 3. Contact Customer Support (see back cover).	- 3.3.4
17. Under Delivery 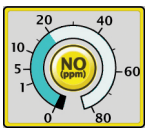 CS.S.0024	INOMAX calculated delivery is 5 ppm below set dose and less than 50% of set dose, whichever is greater (for 12 consecutive seconds).	1. Check circuit flow and calculated delivery graph on the settings screen. 2. If breathing circuit flow is >60 L/min and dose is set >60 ppm, this could lead to an under-delivery condition. 3. Contact Customer Support (see back cover).	-
18. Failed NO Sensor CS.S.0025	Delivery of INOMAX continues during this alarm.		
	NO calibration may have drifted out of specification.	1. Perform a Low Calibration, then a High NO Calibration. 2. Contact Customer Support (see back cover).	Chapter 5
19. Failed NO_2 Sensor CS.S.0025	Delivery of INOMAX continues during this alarm.		
	NO_2 calibration may have drifted out of specification.	1. Perform a Low Calibration, then a High NO_2 Calibration. 2. Contact Customer Support (see back cover).	Chapter 5
20. Failed O_2 Sensor CS.S.0025	Delivery of INOMAX continues during this alarm.		
	O_2 calibration may have drifted out of specification.	1. Perform a Low Calibration, then a High O_2 Calibration. 2. Contact Customer Support (see back cover).	Chapter 5
21. Monitoring Failure CS.S.0026	Delivery of INOMAX continues during this alarm.		
	Monitoring (gas sampling) system has failed.	1. Remove from service. 2. Contact Customer Support (see back cover).	-

Low Priority Alarms All of these actions can be performed while delivering INOMAX to the patient			
Alarm	**Possible Cause**	**Recommended Action**	**Reference**
22. Sample Line/Filter Block 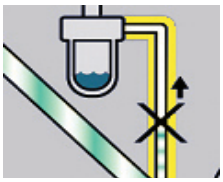 CS.S.0027	The Patient Gas Sample Line and Filter may be blocked.	1. Replace the Patient Gas Sample Line and Filter. 2. Ensure the filter end is connected to the INOmax DS_{IR} Plus and not to the breathing circuit. 3. Contact Customer Support (see back cover).	2.8
	The water separator cartridge may be blocked.	1. Replace water separator cartridge. 2. Contact Customer Support (see back cover).	6.5
23. Two Cylinders Open 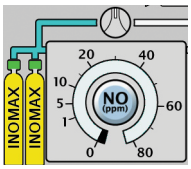 CS.S.0028	Two cylinder valves are open.	1. Close one INOMAX cylinder valve not being used to deliver INOMAX and depressurize the regulator. 2. Contact Customer Support (see back cover).	3.2.6
24. Water Bottle Full 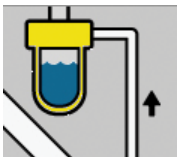 CS.S.0029	The water bottle on the side of the INOmax DS_{IR} Plus is full.	1. Empty water bottle. 2. Contact Customer Support (see back cover).	6.4
	Water bottle is empty but the message remains in the alarm message box.	1. Remove water bottle and clean the optical sensor. 2. Contact Customer Support (see back cover).	6.6.2
25. Low Calibration Failed 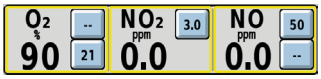 CS.S.0030	Zeroing valve has failed.	1. Repeat manual low calibration. Wait for low calibration to complete (approximately three minutes). 2. Contact Customer Support (see back cover).	5.1.2

Table 7-4 Additional Indicators Table

Additional Indicators			
Indicator	**Possible Cause**	**Recommended Action**	**Reference**
26. Battery Failure CS.S.0031	Device cannot communicate with battery.	1. If in use replace INOmax DS_{IR} Plus as soon as possible. **WARNING** **If battery fails while device is in use, do not unplug AC power.** 2. If the indicator occurs prior to use, remove from service. 3. Contact Customer Support (see back cover) for replacement.	4.6.3
27. Set Dose is Zero. Please Close Cylinder Valve 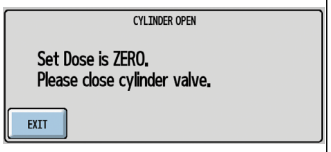 CS.S.0032	The set dose has been set to zero and the INOMAX cylinder valve is still open.	1. Close the INOMAX cylinder valve and depressurize regulator. 2. Replace INOMAX cylinder. 3. Contact Customer Support (see back cover) for replacement.	3.2.6
28. NO Delivery Button Inactive 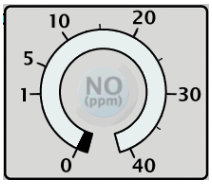 CS.S.0033	Device does not recognize an INOMAX cylinder, the dose button is inactive and will not allow the user to set an initial INOMAX dose.	1. Load INOMAX cylinder onto the Cart. 2. Verify the IR cable is connected to the back of the INOmax DS_{IR} Plus. 3. Reposition/rotate INOmax DS_{IR} Cart. 4. Remove any obstacle between INOmeter and Cart sensor. 5. Move interfering light source. 6. Shield the INOmeter from the suspect light source. 7. Replace INOMAX cylinder. 8. Contact Customer Support (see back cover).	2.2 1.5.6 6.2
	Integrated Pneumatic Backup switch is ON.	1. Correct the reason for initiating Integrated Pneumatic Backup. 2. Turn Integrated Pneumatic Backup OFF and confirm set NO dose has been restored to previously set values. 3. Contact Customer Support (see back cover).	- 3.3.4

7.3 INOmax DS_{IR} Plus Alarm Specifications

All INOmax DS_{IR} Plus alarms have audible tones and visual messages.

WARNING

In the event of a device power failure or a main alarm speaker failure, a secondary audible alarm provides a continuous buzzing tone that cannot be silenced. Provide backup INOMAX delivery to the patient and contact Customer Support (see back cover).

When an alarm occurs, the **Alarm Silence button**:

- Flashes red for high-priority alarms (see **1**, Figure 7-2). When the button is selected, the alarm is silenced for 120 seconds. The seconds count down from 120 to zero (see arrow, Figure 7-3).

  When a new alarm condition occurs, the audible alarm becomes active again.
- Displays yellow for low-priority alarms. When the button is selected, the alarm is silenced permanently.

For either alarm type, when a new alarm condition occurs, the audible alarm becomes active again.

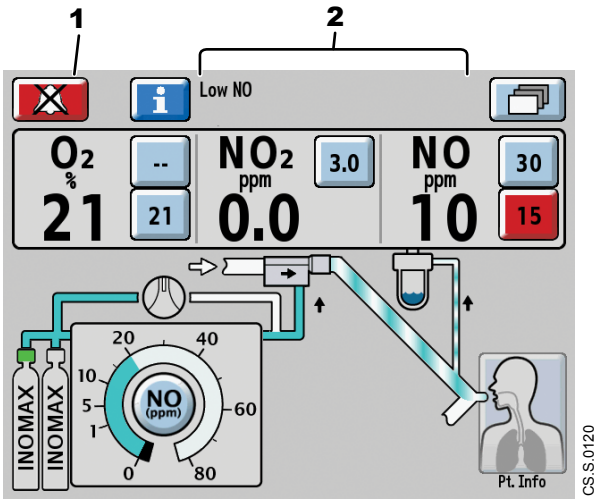

Figure 7-2 Main Screen alarming for Low NO

The alarm message appears at the top of the **Main screen** (**2**, Figure 7-2) until the alarm clears.

- The most recent alarm appears at the top of the screen (field 1, Figure 7-4).
- Previous alarms appear on a line below the most recent alarm (field 2, Figure 7-4).
- When three or more alarms are active, the text in field 1 displays the most current alarm and the other active alarms display alternately in field 2.
- Status messages that usually appear in field 2, such as **Patient Info Incomplete**, do not appear during alarm conditions.

Figure 7-3 Alarm Silence button with countdown

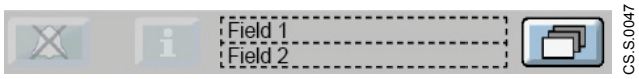

Figure 7-4 Top of Main Screen showing location of message fields

7.3.1 Auditory Alarm Signals

Audible tones for high and low-priority alarms differ in pulse and repetition (see Table 7-5).

Table 7-5 Differences in Low and High Priority Alarms

	Frequency	Description	Comment
High Priority	400 Hz	10-pulse group	Repeats after 10 seconds if not silenced.
Low Priority	400 Hz	1 pulse	Repeats after 40 seconds if not silenced.

During alarm conditions and information signals, the INOmax DS_{IR} Plus creates sound pressure levels depending on the alarm condition and the position of the user in relation to the device. Refer to the table below for the high priority alarm sound pressure level range:

Table 7-6 Volume of Auditory Alarm Signals

Alarm Condition	Volume Level Setting	Measurement Position	Typical A-Weighted* sound pressure level averaged over measurement surface (dBA)
High Priority	5	Right side	63
High Priority	5	Rear	60
High Priority	5	Left side	57
High Priority	5	Front	60

*Calculated A-Weight background sound pressure level based on 8.2.2 of ISO3744:2010. Value calculated to be less than 30dB.

NOTE: Measurements made 1 meter from the device.

NOTE: A-weighted alarm sound pressure level is at minimum +6 dB above A-weighted background level.

7.3.2 Monitor Alarm Delay Active Indicator

The **Low NO alarm** will be delayed for 2 minutes following the initial dose setting to allow the monitored values to stabilize.

Monitor alarms for O_2, NO_2, and NO are inactive any time the **Monitor Alarm Delay Active indicator** is displayed. This delay only effects the monitor alarms, all other alarms remain active.

The Monitor Alarm Delay Active indicator is displayed for two minutes:

- Upon exit from the **Calibration screen** (whether or not a calibration was actually performed).
- Following an automatic **Low Calibration**.
- Following completion of an **Auto Purge**.

Table 7-7 Alarm Ranges and Default Values

Alarm	Adjustment	Increments	Default	Priority
High NO (ppm)	1 to 100	NO *0.0-1.0 by 0.1 ppm *1-99 by 1 ppm	Initially 90, then 50% above the initial set dose*	High
Low NO (ppm)	0 to 99		OFF (--) then 50% below the initial set dose ±	High
High NO_2 (ppm)	0 to 5	NO_2 by 0.1 ppm	3	High
High O_2 (% v/v)	21 to 100 then OFF (--)	O_2 by 1%	-- (OFF)	High
Low O_2 (% v/v)	18 to 99		21 %	High
* Dose settings < 3 ppm will result in a high alarm setting of 5 ppm; otherwise rounded up to the nearest ppm and limited to 90 ppm maximum. ± Rounded down to the nearest ppm.				

NOTE: When the INOmax DS_{IR} Plus power is turned OFF, or in the event of a complete power failure (no AC or battery power), dose alarm settings return to default values (see Table 7-7).

7.4 Displaying Alarm History

When an alarm condition is resolved, the alarm message no longer appears on the **Main screen**. However, alarm messages are stored by the INOmax DS_{IR} Plus and can be viewed either in **Recent Alarms**, or **Alarm History**.

7.4.1 Recent Alarms

The **Recent Alarms button** displays as a double-bell in the upper-left of the screen when alarms have recently occurred. To display recent alarms:

1. Select the **Recent Alarms button** (see Figure 7-5).

   The **Recent Alarms screen** (see Figure 7-6) displays five columns of information:

   - Alarm message (**1**)
   - Priority indicator (**2**)
     - High priority alarms have red dots
     - Low priority alarms have yellow dots
   - Date alarm occurred (**3**)
   - Time alarm occurred (**4**)
   - Duration of alarm (**5**)

   The screen also displays:

   - Page number, and total number of pages (**6**).
   - **Arrow key buttons** (**7**) to display the next or previous page in the list.

To clear recent alarms:

1. Select the **Clear Recent Alarms button** (top left corner of Figure 7-6).

   The **Main screen** will then display.

   To return to the **Main screen** without clearing recent alarm history, select **Exit** or **the Return to Previous Menu button** (top right corner of Figure 7-6). If the user does not select a button within 30 seconds, the **Main screen** appears.

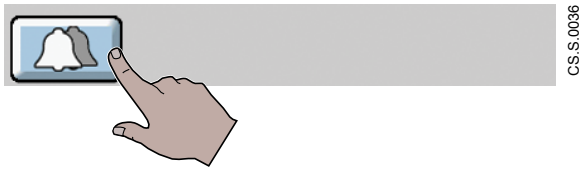

Figure 7-5 Selecting Recent Alarms

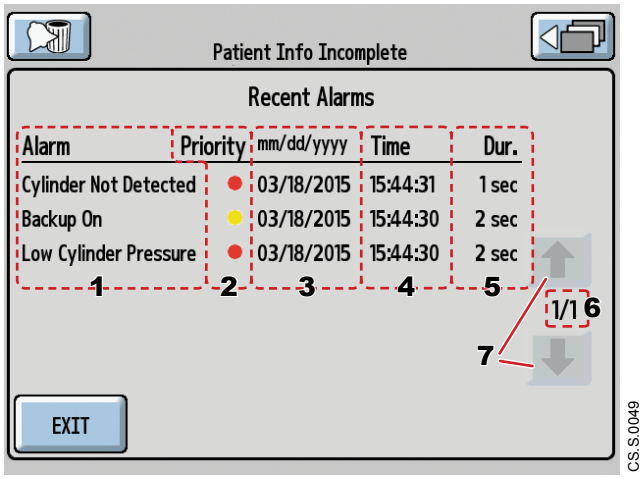

Figure 7-6 Recent Alarms screen

7.4.2 Alarm History

To display all alarms that have occurred since the INOmax DS_{IR} Plus was turned on:

1. Select the **Alarm History button** on the **Menu screen** (see Figure 7-7).

   A complete list of alarms which have occurred since the device was switched on displays (see Figure 7-8). Alarms appear in chronological order; most recent first. The columns are the same as in the **Recent Alarms screen** (Figure 7-7). Up to 2000 alarm listings can be displayed.

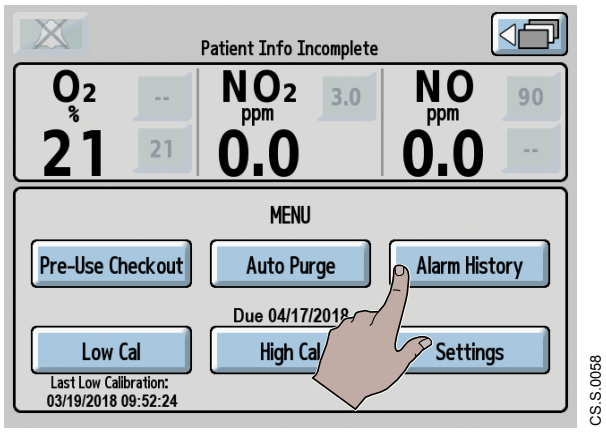

Figure 7-7 Selecting the Alarm History button

The alarm duration is truncated, as shown in Figure 7-8.

For example, an alarm duration for less than 1 second will display as zero, while an alarm that occurred for 61 minutes or more would display as “> 60 min”.

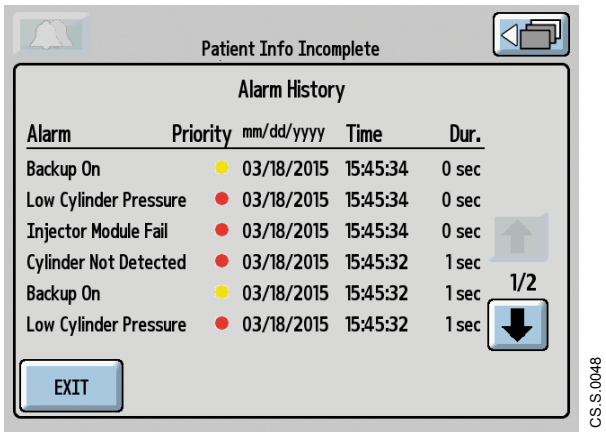

Figure 7-8 Alarm History screen

Mallinckrodt™ Pharmaceuticals

INOmax DS IR® Plus

Product Specifications

8/ Product Specifications

Part No. 21204 Rev-03
2024-06

Mallinckrodt™ Pharmaceuticals

INOmax DS IR® Plus

Product Specifications

8/ Product Specifications

Part No. 21204 Rev-03
2024-06

8 Product Specifications

WARNINGS

Use of the INOmax DS_{IR} Plus is limited to the use in accordance with INOMAX (nitric oxide for inhalation) prescribing information as approved with the national health authority. The primary targeted clinical setting is the Intensive Care Unit (ICU) and secondary targeted clinical setting is the transport of patients.

In the United States, the approved patient population for the INOmax DS_{IR} Plus as specified in the drug labeling for INOMAX (nitric oxide for inhalation) is limited to term and near-term (> 34 weeks gestation) neonates with hypoxic respiratory failure. The INOmax DS_{IR} Plus is not intended to be used in other patient populations.

Outside of the United States, use of the INOmax DS_{IR} Plus is limited to the use in accordance with INOMAX or INOflo (nitric oxide for inhalation) prescribing information as established with the national health authority.

8.1 General Specifications

NO Delivery

Set NO Range:	0.1 - 80 ppm (800 ppm cylinder)
Set NO Resolution:	0.1 ppm from 0 to 1 ppm 1 ppm from 1 to 40 ppm 2 ppm from 40 to 80 ppm
Accuracy @ 20 degrees C:	± 20% or 2 ppm, whichever is the greater
NO Inlet Pressure:	1.7 to 2.4 Bar (25 to 35 psig)
Maximum NO Supply Pressure:	2.4 Bar (35 psig)
NO Low Pressure Alarm:	1.6 Bar (23 psig) (nominal)
Max Circuit Pressure:	1.4 Bar (20 psig)
Breathing Circuit Gas Composition:	Air / O_2 mixtures

Injector Module

Conical Connectors:	Inlet, 22 mm female Outlet, 22 mm male and 15 mm female < 6 mm relief on connection taper (90849 Model Only)
Autoclavability:	Steam autoclavable at 134 degrees C for 3 minutes or 132 degrees C for 4 minutes with dynamic air removal cycle
Maximum Pressure Drop:	1.5 cmH_2O at 60 L/min

Gas Monitoring

Table 8-1 Gas Monitoring Specifications

Gas	Range	Resolution	Accuracy
Nitric Oxide	0 - 10 ppm	0.1	± (20% of reading + 0.5 ppm)
	10 - 100 ppm	1	± (10% of reading + 0.5 ppm)
Nitrogen Dioxide	0 - 10 ppm	0.1	± (20% of reading or 0.5 ppm whichever is greater)
Oxygen	18 - 100 % v/v	1	± 3% v/v

Max Breathing Circuit Pressure:	150 cmH_2O
Calibration:	Daily zero; span when needed
Rise Time:	30 seconds (10 - 90 %)
Sample Flow:	230 mL/min

Integrated Pneumatic Backup

Pneumatic Backup Delivery = 250 mL/min ± 10% fixed flow of INOMAX

Physical

Table 8-2 Physical Specifications

INOmax DS_{IR} Plus (clamp included)			**INOblender** (clamp included)			**Delivery System***	
Height	220 mm		Height	140 mm		Height	149 cm
Width	350 mm		Width	200 mm		Width	53 cm
Depth	260 mm		Depth	220 mm		Depth	56 cm
Weight	5.7 kg		Weight	1.5 kg		Weight	80 kg

*Delivery system includes INOmax DS_{IR} Plus, INOblender, Cart, 2 regulators and 2 INOMAX cylinders.

Environmental

Table 8-3 Environmental Specifications

	Operating	**Transport/Storage**
Temperature	5 to 40 degrees C	-20 to + 60 degrees C
Humidity	15 to 95% RH non-condensing	15 to 95% RH non-condensing
Ambient Pressure	57 to 110 kPa	57 to 110 kPa
Water Ingress Protection	IPX1	

INOMAX Regulator

Inlet Pressure: 13.8 to 155 Bar (200 to 2,248 psig)

Outlet Pressure: 1.7 to 2.4 Bar (25 to 35 psig)

Cylinder Valve Connector: CGA 626

Electrical

NOTE: Disconnect mains power cord to isolate equipment from mains power.

Input Voltage:	100-240 V AC @ 50 / 60 Hz
Input Power:	110 VA max
Input Fuse:	3 A
Classification:	Class I, Type B
Standards:	CSA certified to meet the following for medical electrical equipment:

(IEC 60601-1 second edition citations)

UL 60601-1 (1st edition) Medical Electrical Equipment part 1: General requirements for safety

IEC 60601-1:1988 (Second Edition) +A1: 1991+A2:1995 General requirements for safety (IEC 60601-1 third edition citations)

ANSI/AAMI ES60601-1:2005/(R) 2012, AND C1:2009 AND A2:2010(R)2012 (Consolidated text – edition 3.1) General requirements for basic safety and essential performance

IEC 60601-1:2005 edition 3.0 + AMENDMENT 1, 2012-07, MOD General requirements for basic safety and essential performance

IEC 60601-1-6:2010 (Third Edition) + A1:2013, IDT General requirements for basic safety and essential performance – Collateral standard: Usability

IEC 60601-1- 8: 2006 (Second Edition) + Am.1: 2012 for use in conjunction with IEC 60601-1: 2005 (Third Edition) + Am.1: 2012 Medical Electrical Equipment – Part 1-8 – General Requirements, Tests and guidance for alarm systems

CAN/CSA-C22.2 No.60601-1:14 General requirements for basic safety and essential performance

CAN/CSA-C22.2 No.60601-1-6:11 General requirements for basic safety and essential performance – Collateral standard: Usability

CAN/CSA-C22.2 No.60601-1-8:08 General requirements for basic safety and essential performance – Collateral standard: General requirements, tests and guidance for alarm systems in medical equipment and medical equipment systems

IEC 60601-1-2 Ed. Ed. 4 b:2014 Medical electrical equipment — Part 1-2: .General requirements for basic safety and essential performance — Collateral standard: Electromagnetic compatibility — Requirements and tests

Battery Backup:	A sealed lithium ion rechargeable battery provides power backup to operate the system for up to six hours when fully charged. Connect the system to an electrical outlet for at least ten hours to completely charge the battery. When the low battery alarm occurs, there are 30 minutes until battery depletion. Dispose of used batteries according to local regulations.
USB Port:	Disabled
Ethernet Port:	For service only. Not for use when patient is connected.
RS232:	Enables serial communications for use with hospital electronic health record (EHR) system (see specifications in Section 8.2).
Infrared Port:	Infrared communication with the INOMAX cylinder.

Alarm Log

The alarm history is deleted when device is turned off. However, the service log, which is accessible by service personnel is maintained (including alarm log) when power is cycled and/ or when total power loss occurs.

8.2 RS232 Data Output

Enables serial communications for use with hospital electronic health record (EHR) system. Must be connected to the manufacturer-specified third-party hardware.

WARNINGS
This device should only be connected to RS232 ports that have 4 kV input to output isolation, 4kV input to mains isolation, and an internal "reference voltage" "U" as defined in section 8.8.3 table 7 of ANSI/AAMI ES60601-1:2005 (IEC 60601-1:2005, MOD) of less than or equal to 50 VDC or 50 Vpeak and dielectric isolation certified in accordance with ANSI/AAMI ES60601-1:2005 (IEC 60601-1:2005, MOD). Interface cabling must not go outside of the room (e.g., into walls where potential isolation issues could exist).

RS232 cables must be shielded. The RS232 cable shield shall have a minimum of 90% coverage. The shield shall only be connected at one end of the cable to minimize noise induced by ground currents.

NOTE: Connector retention jack posts can be found at the INOmax DS_{IR} Plus connector. The RS232 interface cable/connector should be constructed to include cable retention fasteners to help ensure a robust connection.

NOTE: This serial communication protocol requires INOmax DS_{IR} software revision 2.1 or higher to function. The software revision of the device can be accessed by selecting the **Menu button** on the **Main screen** and then the **Settings button**.

Definitions

Table 8-4

Acronym/Definition	Description
CRC	Cyclic Redundancy Check
RS232	RS232 (Recommended Standard 232) is the traditional name for a series of standards for serial binary single ended data and control signals connecting between a DTE (Data Terminal Equipment) and a DCE (Data Circuit-terminating Equipment).
ASCII	American Standard Code for Information Interchange

RS232 Port

- Nine pin female DSUB connector
- Pin two - received data, Pin three - transmitted data, Pin five - ground (isolated), Pin seven - RTS (unused), Pin eight - CTS (unused) and Pins one, four, six and nine - no connection
- 38,400 baud, one start bit, eight ASCII data bits, one stop bit, no parity, and no flow control
- Messages are output at a minimum rate of once per second, terminated with a checksum and carriage return.

Data Output Includes:

- Device information
  - Model number, device generated identifier, software revision and user generated patient identifier
- Monitored values
  - Monitored O_2, NO_2 and NO
- Settings
  - Dose setpoint
  - Alarm setpoints
- High O_2, low O_2, high NO_2, high NO and low NO
- Alarm messages
- Device status
- INOMAX cylinder serial number and open/closed status

NOTE: A detailed document regarding output data format is available upon request.

8.3 Electromagnetic Compatibility Information

The INOmax DS_{IR} Plus has been tested to and complies with all compliance levels of the standard. Please refer to the tables below:

Table 8-5

Guidance and Manufacturer's Declaration – Electromagnetic Emissions		
The INOmax DS_{IR} Plus system is intended for use in the electromagnetic environment specified below. The user of the system should assure that it is used in such an environment.		
Emissions Test	**Compliance**	**Electromagnetic Environment - Guidance**
RF emissions CISPR 11	Group 1	The INOmax DS_{IR} Plus system uses RF energy only for its internal function. Therefore, its RF emissions are very low and are not likely to cause any interference in nearby electronic equipment.
RF emissions CISPR 11	Class B	The INOmax DS_{IR} Plus system is suitable for use in all establishments, including domestic establishments and those directly connected to the public low voltage power supply network that supplies buildings used for domestic purposes.
Harmonic current emissions IEC 61000-3-2	Class B	
Voltage fluctuations/flicker emissions IEC 61000-3-3	Complies	

Table 8-6

Guidance and Manufacturer's declaration - Electromagnetic Immunity INOmax DS_{IR} Plus system is intended for use in the electromagnetic environment specified below. The user of the system should assure that they are used in such an environment.			
Immunity Test	**IEC 60601 Test Level**	**Compliance Level**	**Electromagnetic Environment Guidance**
Electrostatic discharge (ESD) IEC 61000-4-2	± 8 kV contact ± 15 kV Air	± 8 kV Contact ± 15 kV Air	Floors should be wood, concrete or ceramic tile. If floors are covered with synthetic material, the relative humidity should be at least 30 %.
Electrical fast transient/burst IEC 61000-4-4	± 2 kV for power supply lines ± 1 kV for input/output lines	± 2 kV for power supply lines ±1 kV for input/output lines	Mains power quality should be that of a typical commercial or hospital environment.
Surge IEC 61000-4-5	± 1 kV line(s) to line(s) ± 2 kV line(s) to earth	± 1 kV line(s) to line(s) ± 2 kV line(s) to earth	Mains power quality should be that of a typical commercial and/or hospital environment.
Voltage dips, short interruptions and voltage variations on power supply input lines IEC 61000-4-11	0 % U_T (100 % dip in U_T) for 0,5 cycle occurring at 0º, 45º, 90º, 135º, 180º, 225º, 270º, 315º 0 % U_T (100 % dip in U_T) for 1 cycle occurring at 0º 70 % U_T (30 % dip in U_T) for 25/30 cycles Voltage interruption at test Voltage level: 0 % U_T 100 % dip in U_T for 250/300 cycles	0 % U_T (100 % dip in U_T) for 0,5 cycle occurring at 0º, 45º, 90º, 135º, 180º, 225º, 270º, 315º 0 % U_T (100 % dip in U_T) for 1 cycle occurring at 0º 70 % U_T (30 % dip in U_T) for 25/30 cycles Voltage interruption at test Voltage level: 0 % U_T 100 % dip in U_T for 250/300 cycles	Mains power quality should be that of a typical commercial and/or hospital environment. If the user of the system requires continued operation during power mains interruptions, it is recommended that the system be powered from an uninterruptible power supply or a battery.
Power frequency (50/60 Hz) magnetic field IEC 61000-4-8	30 A/m Home Healthcare	30 A/m	Home Healthcare Levels
NOTE: U_T is the AC mains voltage prior to application of the test level.			

Guidance and Manufacturer's declaration - Electromagnetic Immunity INOmax DS_{IR} Plus system is intended for use in the electromagnetic environment specified below. The user of the system should assure that they are used in such an environment.			
Immunity Test	**IEC 60601 test level**	**Compliance Level**	**Electromagnetic Environment Guidance**
Conducted RF IEC 61000-4-6	3 Vrms 150 kHz to 80 MHz outside ISM bands[a] 6 Vrms 150 kHz to 80 MHz in ISM bands[a]	3 Vrms (V1) 6 Vrms (V2)	Portable and mobile RF communications equipment, including cables, should be used no closer to any part of the INOmax DS_{IR} Plus system than the recommended separation distance calculated from the equation applicable to the frequency of the transmitter. Recommended separation distance $d=3.5*\sqrt{P}/V1$ $d=12*\sqrt{P}/V2$
Radiated RF IEC 61000-4-3	10 V/m 80 MHz to 2.7 GHz	10 V/m 26 MHz to 2.7 GHz (E1)	$d=12*\sqrt{P}/E1$ 80 MHz to 800 MHz $d=23*\sqrt{P}/E1$ 800 MHz to 2.7 GHz Where P is the maximum output power rating of the transmitter in watts (W) according to the transmitter manufacturer and d is the recommended separation distance in meters (m)[b]. Field strengths from fixed RF transmitters, as determined by an electromagnetic site survey[c], should be less than the compliance level in each frequency range [d]. Interference may occur in the vicinity of equipment marked with this symbol:
Proximity fields from RF wireless communications equipment	380 - 390 MHz 27 V/m; PM 50%; 18 Hz 430 - 470 MHZ 28 V/m; (FM ±5 kHz, 1 kHz sine) PM; 18 Hz 704 - 787 MHZ 9 V/m; PM 50%; 217 Hz 800 - 960 MHZ 28 V/m; PM 50%; 18 Hz 1700 - 1990 MHZ 28 V/m; PM 50%; 217 Hz 2400 - 2570 MHZ 28 V/m; PM 50%; 217 Hz 5100 - 5800 MHZ 9 V/m; PM 50%; 217 Hz	380 - 390 MHz 27 V/m; PM 50%; 18 Hz 430 - 470 MHZ 28 V/m; (FM ±5 kHz, 1 kHz sine) PM; 18 Hz 704 - 787 MHZ 9 V/m; PM 50%; 217 Hz 800 - 960 MHZ 28 V/m; PM 50%; 18 Hz 1700 - 1990 MHZ 28 V/m; PM 50%; 217 Hz 2400 - 2570 MHZ 28 V/m; PM 50%; 217 Hz 5100 - 5800 MHZ 9 V/m; PM 50%; 217 Hz	Portable RF communications equipment (including peripherals such as antenna cables and external antennas) should be used no closer than 30 cm (12 inches) to any part of the device, including cables specified by the manufacturer. Otherwise, degradation of the performance of this equipment could result.

NOTES:

- At 80 MHz and 800 MHz, the higher frequency range applies.
- These guidelines may not apply in all situations. Electromagnetic propagation is affected by absorption and reflection from structures, objects and people.

[a] The ISM (industrial, scientific and medical) bands between 150 kHz and 80 MHz are 6.765 MHz to 6.795 MHz; 13.553 MHz to 13.567 MHz; 26.957 MHz to 27.283 MHz; and 40.66 MHz to 40.70 MHz.

[b] The compliance levels in the ISM frequency bands between 150 kHz and 80 MHz and in the frequency range 80 MHz to 2.7 GHz are intended to decrease the likelihood that a portable communications device could cause interference if it is inadvertently brought into patient areas. For this reason, an additional factor of 10/3 is used in calculating the recommended separation distance for transmitters in these frequency ranges.

[c] Field strengths from fixed transmitters, such as base stations for radio (cellular/cordless) telephones and land mobile radios, amateur radio, AM and FM radio broadcast and TV broadcast cannot be predicted theoretically with accuracy. To assess the electromagnetic environment due to fixed RF transmitters, an electromagnetic site survey should be considered. If the measured field strength in the location in which the INOmax DS_{IR} Plus system is used exceeds the applicable RF compliance level above, the INOmax DS_{IR} Plus system should be observed to verify normal operation. If abnormal performance is observed, additional measures may be necessary, such as reorienting or relocating the INOmax DS_{IR} Plus system.

[d] Over the frequency range 150 kHz to 80 MHz, field strengths should be less than 3 V/m.

Table 8-7

Recommended separation distances between portable and mobile RF communications equipment and the INOmax DS_{IR} Plus system				
The INOmax DS_{IR} Plus system is intended for use in an electromagnetic environment in which radiated RF disturbances are controlled. The user of the INOmax DS_{IR} Plus system can help prevent electromagnetic interference by maintaining a minimum distance between portable and mobile RF communications equipment (transmitters) and the INOmax DS_{IR} Plus system as recommended below, according to the maximum output power of the communications equipment.				
Rated Maximum Output Power of Transmitter W	**Separation distance according to frequency of transmitter** (meters)			
	150 kHz to 80 MHz Outside ISM bands d=1.2*√ P	**150 kHz to 80 MHz In ISM bands** d=2*√ P	**80 MHz to 800 MHz** d=1.2*√ P	**800 MHz to 2.7 GHz** d=2.3*√ P
0.01	0.12	0.2	0.12	0.23
0.1	0.38	0.63	0.38	0.73
1	1.2	2.0	1.2	2.3
10	3.8	6.3	3.8	7.3
100	12	20	12	23
For transmitters rated at a maximum output power not listed above, the recommended separation distance d in meters (m) can be estimated using the equation applicable to the frequency of the transmitter, where P is the maximum output power rating of the transmitter in watts (W) according to the transmitter manufacturer.				

Mallinckrodt™ Pharmaceuticals

INOmax DS IR® Plus

9/ Appendices

Appendicies

Part No. 21204 Rev-03
2024-06

Mallinckrodt™ Pharmaceuticals

INOmax DS$_{IR}$® Plus

Appendices

9/ Appendices

Part No. 21204 Rev-03
2024-06

9 Appendices

Appendix A - Abbreviated Manual Pre-Use Checkout **9-3**
Appendix B - Duration and Dilution Charts **9-6**
Appendix C - Gas Delivery Systems Validated for Use in the U.S. **9-9**
Appendix D - Gas Delivery Systems Used Outside the U.S. **9-29**
Appendix E - Gas Delivery Systems that Failed Testing **9-44**
Appendix F - Parts and Accessories **9-45**

NOTE: The Table of Contents at the front of this manual includes all the subsection titles for Appendix C and D.

A Appendix A - Manual Pre-Use Checkout

It is recommended that users follow the Automated Pre-Use Checkout wizard (*see Section 3.2*). The checkout process can also be done manually, as follows. It is the users responsibility to read and understand the manual prior to using this Abbreviated Pre-use Checkout.

WARNING
Position all cables and hoses to help prevent damaging or occluding them.

A.1 Confirm the Following are Attached:

1. Water separator cartridge, water bottle, and Patient Gas Sample Line and Filter.
2. Injector module cable and tubing.

   NOTE: It is recommended to clean, disinfect or sterilize the Injector Module prior to setup.

3. Power cord (plugged in; AC power light is ON).
4. Regulator connected to 800 ppm INOMAX cylinder.

   NOTE: If using the Transport Regulator/Cap Assembly, refer to *Section 4.1.1*.

5. INOblender hose (white quick-connect cover also in place).
6. Oxygen source connected to back of INOblender 3.5 bar (50 psig).
7. IR cable.

A.2 Assemble the Pre-use Circuit:

Do not turn O_2 flowmeter ON yet.

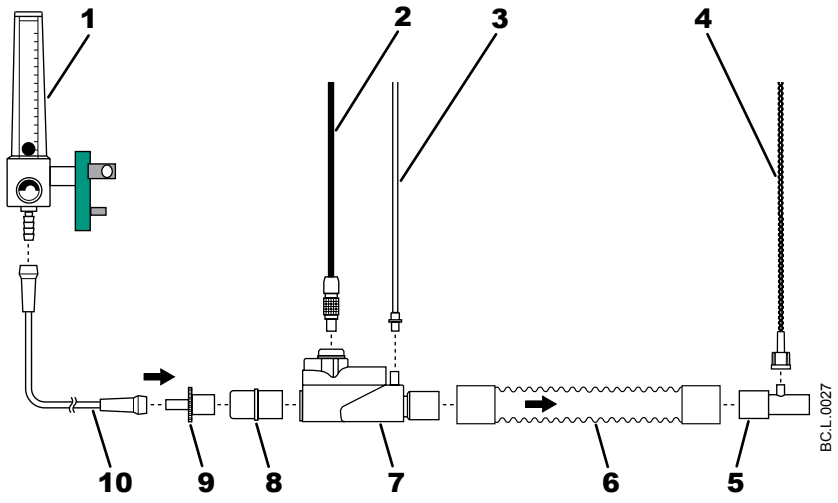

1. O_2 Flowmeter (Connected to wall/tank)
2. Injector Module Electrical Cable
3. NO/N2 Injector Tube
4. Patient Gas Sample Line and Filter
5. Gas Sample Tee
6. 300mm of 22mm Hose
7. Injector Module
8. 22M / 15F x 22M / 15F Adapter
9. 15M x 4.5mm Adapter
10. O_2 Tubing

Figure A-1

A.3 Test for High Pressure NO Leaks:

WARNINGS

Do not use the INOblender unless the INOMAX cylinder and regulator have been purged. Purging the pressure regulator, INOblender and hoses minimizes NO_2 exposure.

Loss of communication between the INOmax DS_{IR} Plus and the INOmeter for more than one hour will interrupt INOMAX delivery. If this occurs, use one of the backup delivery systems.

1. Open and then close the INOMAX cylinder valve handle. Verify the cylinder has at least 34.5 bar (500 psig). Replace if 13.8 bar (200 psig) or less.
2. Verify there is no decrease in cylinder pressure for 30 seconds.

A.4 Manual Purge and Alarm Verification:

WARNING

A new INOMAX cylinder and regulator must be purged before use to ensure the patient does not receive greater than 1.0 ppm of NO_2.

1. Press the **Cancel button** to exit pre-use wizard.
2. Verify the INOMAX cylinder valve is fully closed.
3. Set the O_2 flowmeter to 10 L/min (see Figure A-1).
4. Purge INOmax DS_{IR} Plus: Set the INOMAX dose to 40 ppm and verify that:
   - **Cylinder Valve Closed** alarm occurs.
   - Cylinder gauge pressure drops to 0 bar (0 psig).
   - Measured NO_2 value increases and then decreases as NO_2 is purged from the system.
   - **Low Cylinder Pressure** alarm occurs.
5. Open the INOMAX cylinder valve handle.
6. Turn the INOMAX dose to zero. The **Set Dose is Zero, Close Cylinder Valve indicator** (pop-up box) appears.

   This indicator displays any time the set dose is returned to zero; however, during this pre-use procedure, leave the cylinder open and select the **Exit button** to cancel the indicator.

A.5 Integrated Pneumatic Backup Test:

1. Verify pre-use assembly flowmeter is set to 10 L/min.
2. Turn the Integrated Pneumatic Backup switch to ON.

   Verify measured values:

   NO = 14-26 ppm

   $NO_2 \leq 1.0$ ppm
3. Turn the Integrated Pneumatic Backup switch to OFF.

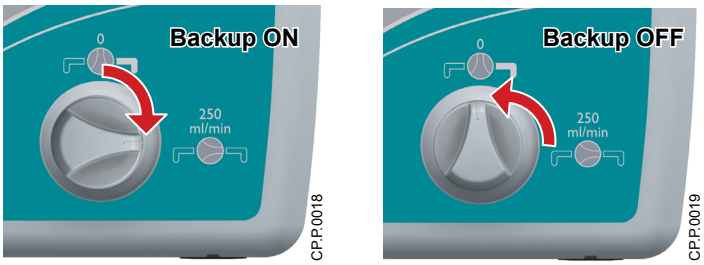

Figure A-2

A.6 Performance Test

1. Verify O_2 flowmeter is set to 10 L/min.
2. Set INOMAX dose to 40 ppm.
3. Verify monitored values (table at right).
4. Set INOMAX dose to 0 ppm.
5. The indicator **Set Dose is Zero, Please Close Cylinder Valve** will appear. <u>However, do not close the cylinder valve at this time</u>.
6. Turn oxygen flowmeter OFF.

Table A-1 Performance Test Parameters

Acceptable NO Value (ppm)	35-45
Acceptable NO_2 Value (ppm)	< 1.5
Acceptable O_2 Value (%)	95 ± 3

A.7 INOblender Test

1. Remove the Injector Module from the pre-use assembly (see **1** in Figure A-3).
2. Remove the O_2 tubing from the flowmeter and attach it to the INOblender outlet (**2**).
3. Set INOblender flow to 10 L/min (**3**) and INOMAX dose to 40 ppm (**4**).
4. Confirm acceptable NO value: NO = 32-48 ppm (**5**)
5. Set INOblender dose and O_2 flow rate to 0 (**6**).

   This is the end of the Abbreviated Manual Pre-use Checkout.

NOTE: If device is not used within 10 minutes, depressurize cylinder regulator.

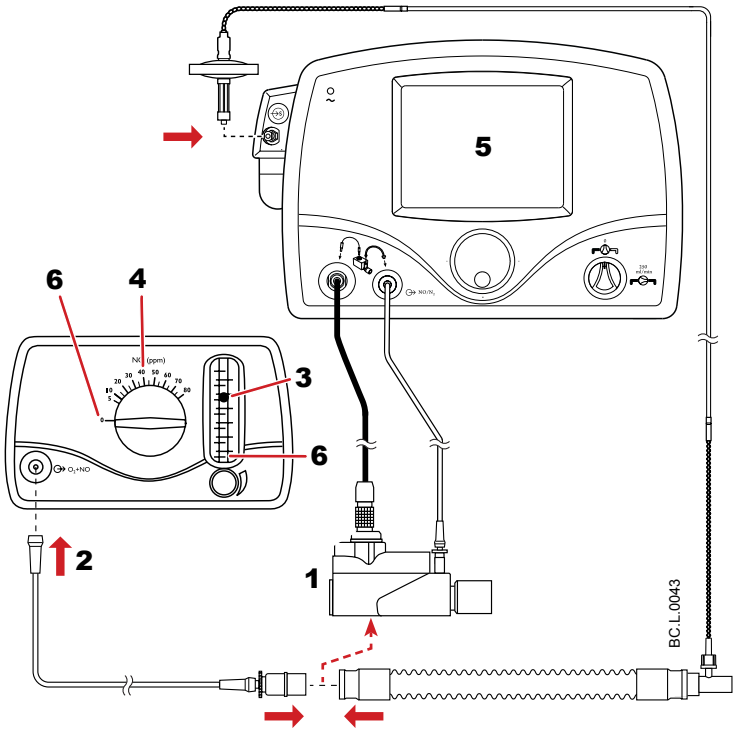

Figure A-3

WARNINGS

If the INOmax DS_{IR} Plus is not going to be used on a patient within 10 minutes, depressurize the regulator supply line.

If the INOmax DS_{IR} Plus is not used and is pressurized for more than 10 minutes, repeat purge procedure.

If the INOmax DS_{IR} Plus is depressurized and not used on a patient within 24 hours, repeat the pre-use procedure.

B Appendix B - Duration and Dilution Charts

B.1 Duration Chart – INOMAX Cylinder 88-Size (Illustrative Only)*

NOTE: The following is a duration chart for an 88-Size 800 ppm Cylinder Concentration. This table represents a range of doses available on the INOmax DS_{IR} Plus. Doses higher than 20 ppm are not the recommended therapeutic dose.

Table B-1 88-Size Cylinder Duration Chart

		FLOW			
		5 L/min	**10 L/min**	**20 L/min**	**40 L/min**
INOMAX Dose (ppm)	**5**	39 Days	19.5 Days	9.8 Days	4.9 Days
	10	19.4 Days	9.7 Days	4.8 Days	2.4 Days
	20	9.6 Days	4.8 Days	2.4 Days	1.2 Days
	40	4.7 Days	2.3 Days	1.2 Days	14 Hours
	80	2.2 Days	1.1 Days	13.3 Hours	6.6 Hours

* All calculations for the table above are based on a full cylinder of 128 bar (1,850 psig), 1766 liters “88” cylinder, and also accounting for cylinder change at 13.8 bar (200 psig). The figures are calculated on total continuous flow cylinder conversion factor (14.2 liters per bar and 0.98 liters per psig).

- INOMAX flow = [desired dose × total ventilator flow] ÷ [cylinder concentration - desired dose]
- Cylinder volume = cylinder conversion factor × cylinder pressure (bar/psig)
- Cylinder duration = cylinder volume ÷ INOMAX flow rate

Calculations are considered estimates and may vary under clinical circumstances.

B.2 Duration Chart – INOMAX Transport Cylinder D-Size (Illustrative Only)*

The following is a duration chart for a D-Size 800 ppm cylinder concentration typically used in transport.

NOTE: This chart represents a range of doses available on the INOmax DS_{IR} Plus. Doses higher than 20 ppm are not the recommended therapeutic dose.

Table B-2 D-Size Cylinder Duration Chart

		FLOW			
		5 L/min	**10 L/min**	**20 L/min**	**40 L/min**
INOMAX Dose (ppm)	**5**	7.0 Days	3.5 Days	1.8 Days	21 Hours
	10	3.5 Days	1.7 Days	21 Hours	10.5 Hours
	20	1.7 Days	20.7 Hours	10.3 Hours	5.2 Hours
	40	20 Hours	10 Hours	5 Hours	2.5 Hours
	80	9.5 Hours	4.8 Hours	2.4 Hours	1.2 Hours

CP.P.0025

*All calculations for the table above are based on a full cylinder of 128 bar (1,850 psig), 316 liter “D” cylinder, and also accounting for cylinder change at 13.8 bar (200 psig). The figures are calculated on total continuous flow cylinder conversion factor (2.6 liters per bar and 0.18 liters per psig).

- INOMAX flow = [desired dose × total gas delivery system flow] ÷ [cylinder concentration - desired dose]
- Cylinder volume = cylinder conversion factor × cylinder pressure (bar/psig)
- Cylinder duration = cylinder volume ÷ INOMAX flow rate

Calculations are considered estimates and may vary under clinical circumstances.

B.3 Oxygen Dilution Chart (Illustrative Only)*

The following is a dilution chart for delivery with 800 ppm cylinder of INOMAX.

Table B-3 Oxygen Dilution Chart

INOMAX Dose (ppm)	Set FiO_2				
	.21	.40	.60	.80	1.00
10	.21	.40	.59	.79	.99
20	⚠ .20	.39	.59	.78	.98
40	⚠ .20	.38	.57	.76	.95
80	⚠ .19	.36	.54	.72	.90
	Actual FiO_2				

⚠ CAUTION: FiO_2 less than 0.21

FiO_2 less than 0.21 can deliver subatmospheric oxygen levels due to the dilution of oxygen by the INOMAX.

*This chart is representative of a range of doses available on the INOmax DS_{IR} Plus. Doses higher than 20 ppm are not the recommended therapeutic dose.

Calculations are considered estimates and may vary under clinical circumstances.

All numbers have been rounded to the nearest hundredth.

C Appendix C - Gas Delivery Systems Validated for Use in the U.S. (with the INOmax DS_{IR} Plus)

WARNING

In the United States, the approved patient population for the INOmax DSIR Plus as specified in the drug labeling for INOMAX (nitric oxide for inhalation) is limited to term and near-term (> 34 weeks gestation) neonates with hypoxic respiratory failure. The INOmax DSIR Plus is not intended to be used in other patient populations.

Table C-2 Ventilators/Breathing Systems Validated for Use in the U.S. is the complete list. Following this table are diagrams for a representative sample of gas delivery systems. Systems with associated diagrams are marked in the table with an "‡" symbol in the "Model" column.

Table C-1 Gas Delivery System Specification Ranges

Specification	Range
Inspiratory Flow Rate (L/min):	2 - 120
Respiratory Rate (bpm):	6 - 60
Airway Peak Pressure (cmH_2O):	0 - 70
Positive End Expiratory Pressure (cmH_2O):	0 - 20

Table C-2 Ventilators/Gas Delivery Systems Validated for use in the U.S.

Manufacturer (At Time of Validation)	Model	Gas Delivery System Range Tested (Neonatal)	Gas Delivery System Range Tested (Pediatric/Adult)
A-plus Medical	Babi-Plus Bubble CPAP‡	N/A	N/A
Airon Corporation	pNeuton	N/A	●
BD-CareFusion	Airlife nCPAP System‡	N/A	N/A
BD-CareFusion	Avea	●	●
BD-CareFusion	Bird VIP	●	●
BD-CareFusion	Infant Flow CPAP System‡	N/A	N/A
BD-CareFusion	Infant Flow SiPAP‡	N/A	N/A
BD-CareFusion	Pulmonetic LTV 1000	N/A	●
BD-CareFusion	Pulmonetic LTV 1200	N/A	●
BD-CareFusion	ReVel	●	●
BD-CareFusion	3100A‡	●	N/A
BD-CareFusion	3100B‡	N/A	●
BD-CareFusion	Vela	●	●
Bear	750ps (Cub)	●	N/A

Manufacturer (At Time of Validation)	Model	Gas Delivery System Range Tested (Neonatal)	Gas Delivery System Range Tested (Pediatric/Adult)
Bio-Med Devices	Crossvent 2	●	●
Bio-Med Devices	Crossvent 4	●	●
Bio-Med Devices	MVP-10	●	●
Bio-Med Devices	TV-100	●	●
Bunnell	Life Pulse , 203/204	●	N/A
Covidien	PB 840	●	●
Covidien	PB 980	●	●
Dräger	Apollo	N/A	●
Dräger	Babylog 8000	●	N/A
Dräger	Carina	●	●
Dräger	Evita	●	●
Dräger	Evita Babylog VN500	●	N/A
Dräger	Infinity V500	●	●
Dräger	Narcomed 2B	●	●
Dräger	Perseus A500	●	●
eVent Medical	Inspiration LS	●	●
Fisher & Paykel Healthcare	Airvo 2	●	N/A
Fisher & Paykel Healthcare	Bubble CPAP System‡	N/A	N/A
Fisher & Paykel Healthcare	RT329 Breathing Circuit and BC Nasal Cannula‡	●	N/A
Fisher & Paykel Healthcare	RT202 Breathing Circuit & Optiflow Adult Interface‡	●	●
Fisher & Paykel Healthcare	RT330 Breathing Circuit & Optiflow Jr.	●	N/A
GE Healthcare	Aespire 7100	●	●
GE Healthcare	Aespire 7900	●	●
GE Healthcare	Aestiva	●	●
GE Healthcare	Aisys	●	●
GE Healthcare	Avance	●	●
GE Healthcare	Carescape R860	●	●
GE Healthcare	Centiva/5	●	●
GE Healthcare	Engström Carestation	●	●
GE Healthcare	Excel SE 7800	N/A	●
GE Healthcare	Mod SE 7900	●	●

Manufacturer (At Time of Validation)	Model	Gas Delivery System Range Tested (Neonatal)	Gas Delivery System Range Tested (Pediatric/Adult)
Hamilton	Arabella‡	N/A	N/A
Hamilton	C1	●	●
Hamilton	C2	●	●
Hamilton	C3	●	●
Hamilton	G5	●	●
Hamilton	Galileo	●	●
Hamilton	T1	●	●
Impact Instrumentation	EMV+	●	●
Impact Instrumentation	Uni-Vent	●	●
IMT Medical	Bellavista	●	●
Infrasonics	Infant Star 100	●	N/A
Infrasonics	Infant Star 500	●	N/A
Infrasonics	Infant Star 950	●	N/A
Maquet	Flow-i	●	●
Maquet	Servo 300	●	●
Maquet	Servo i	●	●
Maquet	Servo u/n	●	●
Medtronic	Newport E360	●	●
Medtronic	Newport HT50	N/A	●
Medtronic	Newport Wave	●	●
Nasal Cannula	NA	N/A	N/A
Phillips	Respironics Esprit	●	●
Puritan Bennett	7200	N/A	●
Sechrist	IV-100B	●	N/A
Smiths Medical	babyPAC 100	●	N/A
Smiths Medical	ventiPAC 200D	●	●
Teleflex Medical OEM	Comfort Flo Humidification System‡	N/A	N/A
Vapotherm	2000i‡	N/A	N/A
Vapotherm	Precision Flow‡	N/A	N/A

NOTES:

‡ A circuit diagram for this gas delivery system follows this table.

C.1 A-Plus Medical

C.1.1 Babi-Plus Bubble CPAP

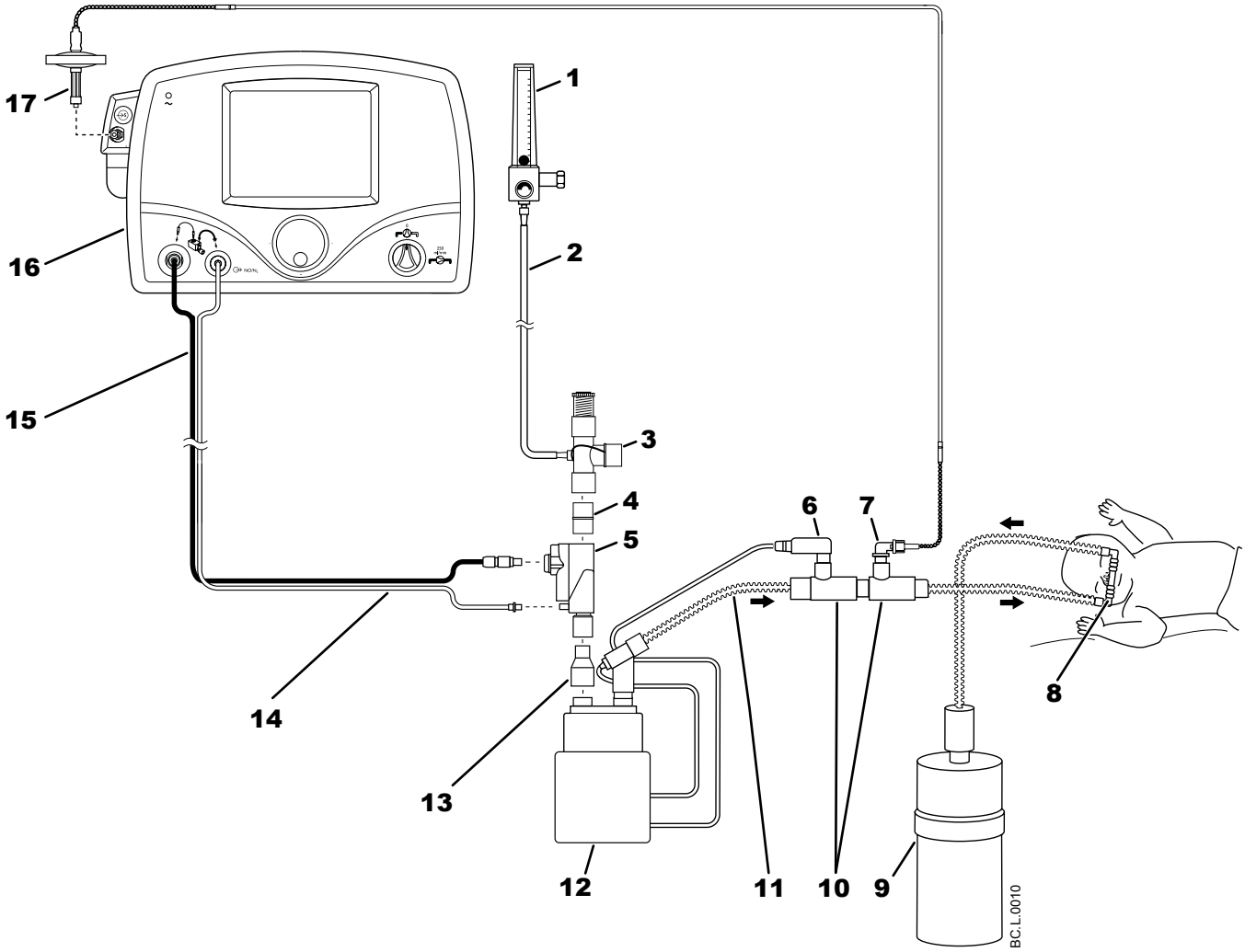

1. O_2 Source
2. O_2 Tubing
3. Pressure Relief Manifold
4. 22M/15F X 22M/15F Adapter
5. Injector Module
6. Temperature Probe
7. 90 Degree Sample Port Adapter
8. Nasal Prongs
9. Babi-Plus Bubble PAP Valve
10. Tee Adapter
11. Breathing Circuit
12. Humidifier
13. 22F X 15M Adapter
14. NO/N2 Injector Tube
15. Injector Module Electrical Cable
16. INOmax DS_{IR} Plus
17. Patient Gas Sample Line and Filter

Figure C-1 Babi-Plus Bubble CPAP circuit diagram

C.2 BD-CareFusion

C.2.1 Airlife nCPAP System

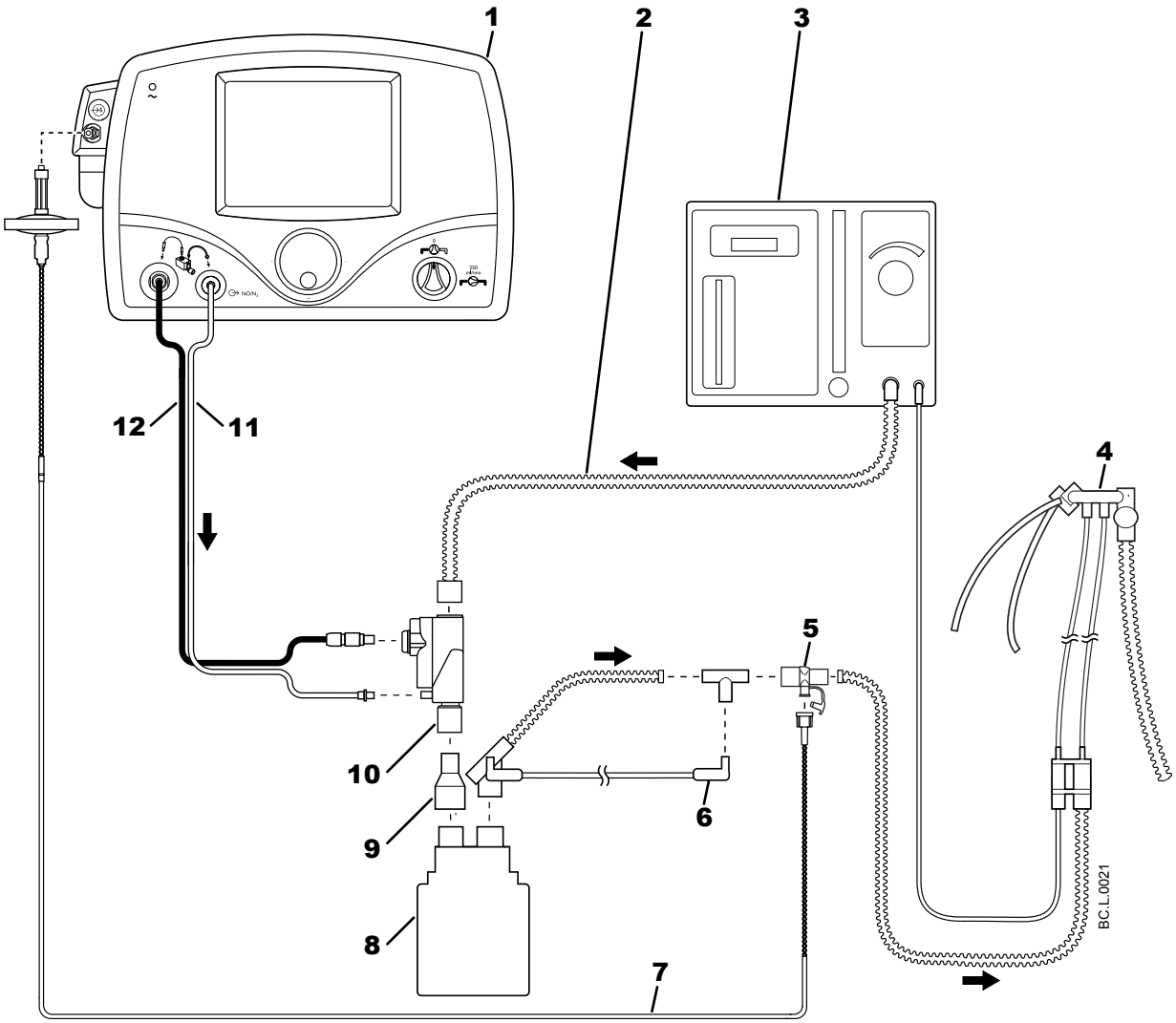

1. INOmax DS_{IR} Plus
2. Heated Delivery Circuit
3. Infant Flow System
4. Infant Flow Generator
5. Gas Sample Tee
6. Temperature Probe
7. Patient Gas Sample Line and Filter
8. Humidifier
9. 22F X 15M Adapter
10. Injector Module
11. NO/N2 Injector Tube
12. Injector Module Electrical Cable

Figure C-2 Airlife nCPAP system circuit diagram

C.2.2 Infant Flow SiPAP

The INOmax DS_{IR} Plus adds INOMAX gas flow to the breathing circuit flow in proportion to the NO setting (up to 10% at 80 ppm) and subtracts gas from the breathing circuit via gas sampling at a nominal flow rate of 0.23 L/min. Refer to *Section 1.4.3 Effect of the INOmax DS_{IR} Plus in a Gas Delivery System Circuit* for additional information.

These effects change the flow to the nasal adapter and can therefore impact the CPAP level established by specific flow settings (see Table below). The maximum flow error is approximately 11% at 2 L/min, which is within the accuracy of the flow meter specification (+/-15%).

After the NO setting is changed, check the CPAP level on the Infant Flow SiPAP front panel display and adjust the level as necessary.

Validation testing has shown that the impact of adding NO/NO_2 gas flow and subtracting gas from the breathing circuit can impact the non-invasive device settings.

Table C-3 Effect on CPAP Levels

Parameter	Flow	Flow	Flow	Flow	Flow
SiPAP Flow Setting (L/min)	2	4	6	8	10
After INOmax DS_{IR} Plus Set @ 0 ppm (L/min)	1.77	3.77	5.77	7.77	9.77
% error (L/min)	-11.5	-5.8	-3.8	-2.9	-2.3
After INOmax DS_{IR} Plus Set @ 80 ppm (L/min)	1.97	4.17	6.37	8.57	10.77
% error (L/min)	-1.5	4.3	6.2	7.1	7.7

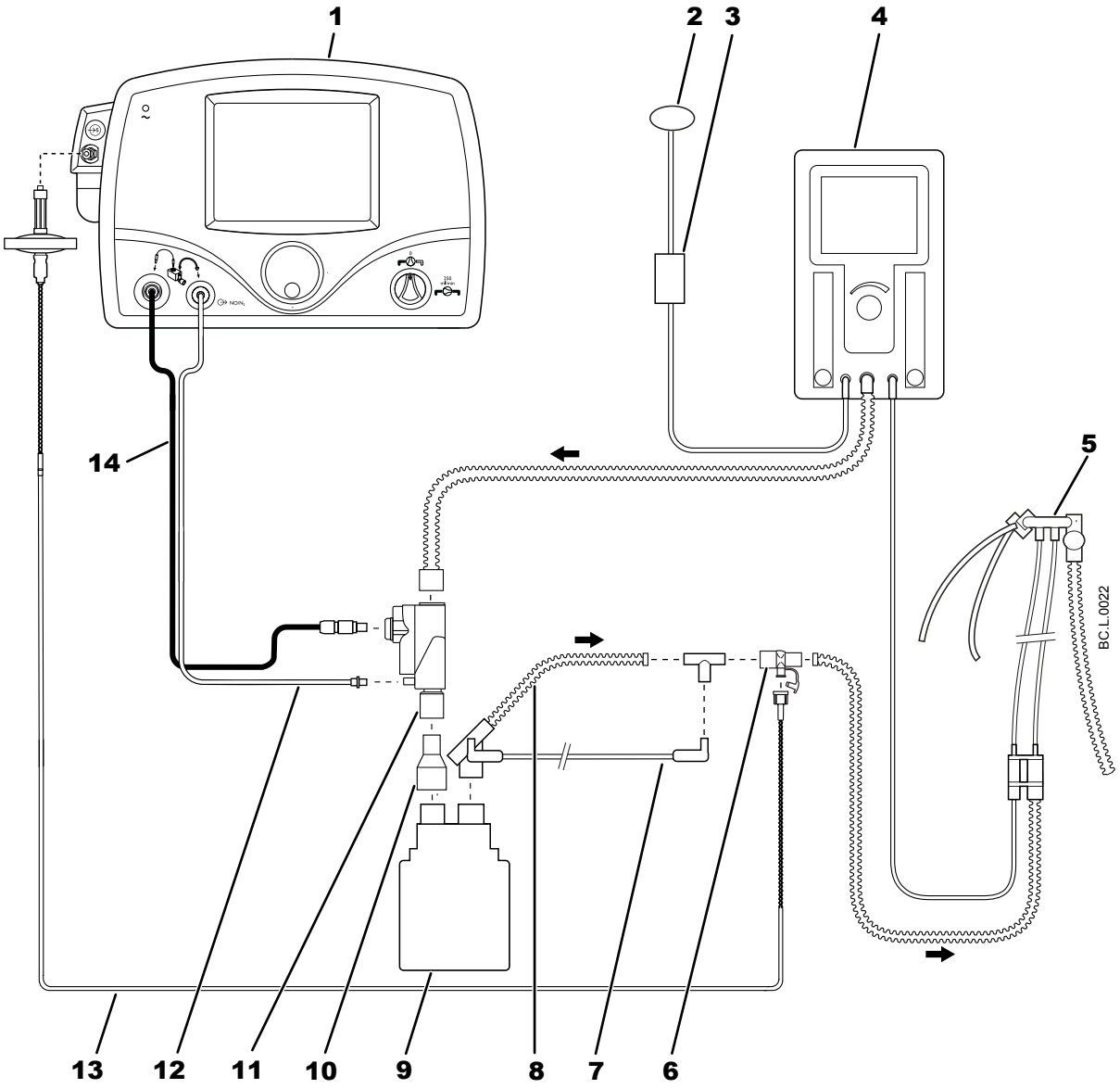

1. INOmax DS_{IR} Plus
2. Abdominal Respiratory Sensor
3. Transducer Interface
4. Infant Flow SiPAP
5. Infant Flow Generator
6. Gas Sample Tee
7. Temperature Probe
8. Heated Delivery Circuit
9. Humidifier
10. 22F X 15M Adapter
11. Injector Module
12. NO/N2 Injector Tube
13. Patient Gas Sample Line and Filter
14. Injector Module Electrical Cable

Figure C-3 Infant Flow SiPAP circuit diagram

C.2.3 3100A/B High Frequency Oscillatory Ventilator with Filtered Circuit

WARNING

Do not omit the one-way valve. This can result in high NO delivery outside of product specifications.

NOTE: Use only parts provided by the device manufacturers and tightly secure all connections.

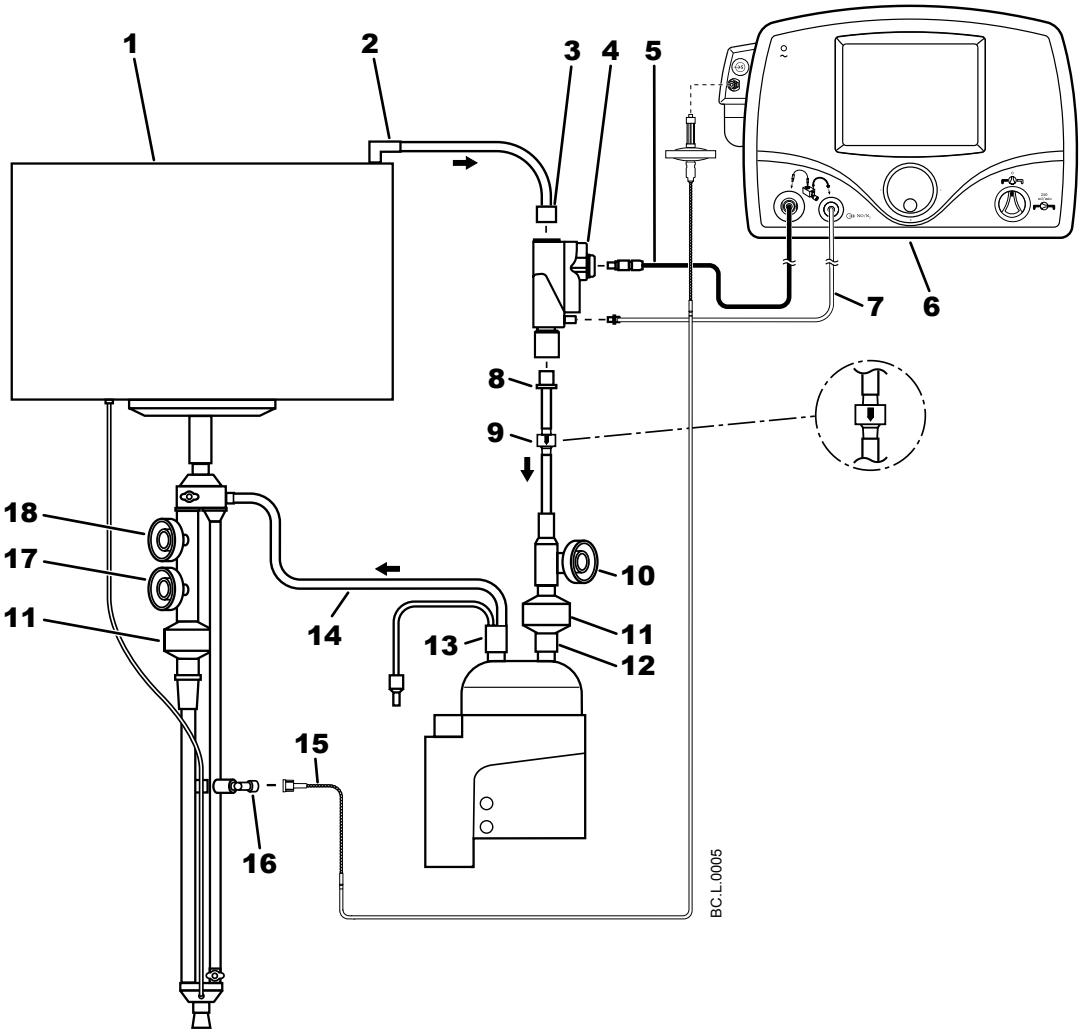

1. 3100A/B Ventilator (Top View)
2. Ventilator Outlet
3. 22M Adapter
4. Injector Module
5. Injector Module Electrical Cable
6. INOmax DS_{IR} Plus
7. NO/N2 Injector Tube
8. 8 mm Tubing X 15M Adapter
9. One-Way Valve
10. Paw Limit Valve Control
11. Filter
12. Humidifier Inlet
13. Humidifier Outlet
14. Bias Flow Tube
15. Patient Gas Sample Line and Filter
16. 90 Degree Sample Port Adapter
17. Dump Valve Control
18. Paw Control Valve

Figure C-4 3100A/B High Frequency Oscillatory Ventilator with a filtered circuit diagram

C.2.4 3100A/B High Frequency Oscillatory Ventilator with Rigid or Flexible Circuit

WARNING

Do not omit the one-way valve. This can result in high NO delivery outside of product specifications.

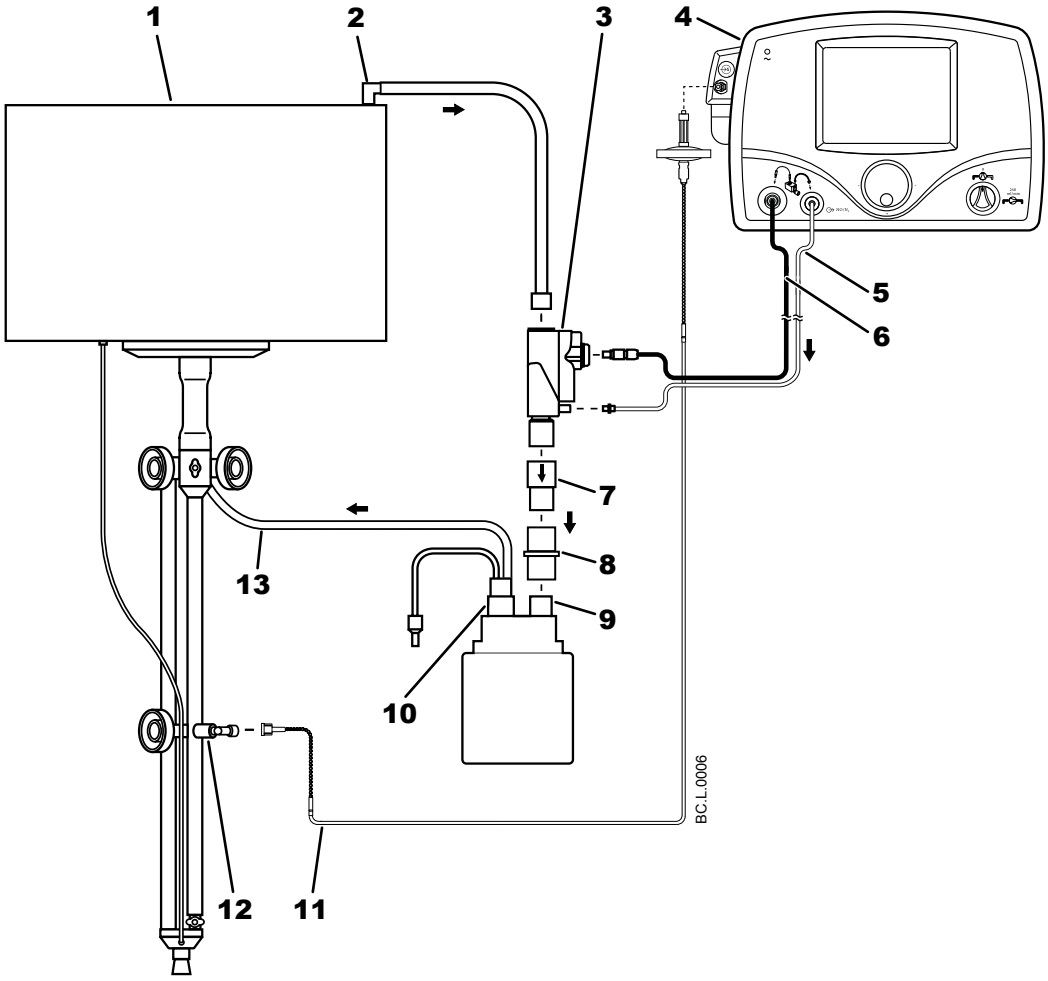

1. 3100A/B Ventilator (Top View)
2. Ventilator Outlet
3. Injector Module
4. INOmax DS_{IR} Plus
5. NO/N2 Injector Tube
6. Injector Module Electrical Cable
7. One-Way Valve
8. 22 mm ID X 22 mm ID Cuff Adapter
9. Humidifier Inlet
10. Humidifier Outlet
11. Patient Gas Sample Line and Filter
12. 90 Degree Sample Port Adapter
13. Bias Flow Tube

Figure C-5 3100A/B High Frequency Oscillatory Ventilator with a rigid or flexible circuit diagram

C.3 Bunnell

C.3.1 Life Pulse, 203/204, High Frequency Ventilator Circuit

WARNINGS

Do not suction the patient without first placing the Bunnell Life Pulse ventilator in Standby. Otherwise the system will over-deliver NO during this time period by as much as 30 ppm.

Immediately upon removing the suctioning catheter, press the Enter button on the Bunnell Life Pulse ventilator to reestablish ventilation. This will limit the extent of over-delivery.

Do not use the Integrated Pneumatic Backup with the Bunnell Life Pulse ventilator because with low servo pressures, flow rates can be below 2 L/min, resulting in delivered INOMAX doses greater than 80 ppm.

CAUTIONS

If set dose is below five ppm and the Servo pressure is 0.14 bar (2.0 psig) or less, this will result in flow rates outside of the specification of the Injector Module and fluctuating NO values may result.

When the Bunnell Life Pulse ventilator is in Standby or turned off, water can back up into the Injector Module (**12** in Figure C-6). Place a one-way valve (**11**) between the Injector Module and the humidifier chamber to prevent water from backing up into the Injector Module.

NOTE: The Bunnell Life Pulse ventilator generates higher pressure in the breathing circuit than conventional ventilators. Ensure all circuit connections are secure and use only parts provided by the device manufacturers to prevent inadvertent disconnection.

NOTE: Obtain the Bunnell Life Pulse convenience pack; it contains all necessary parts to interface the INOmax DS_{IR} plus. Each part in the convenience pack is identified with an asterisk (*) beside the corresponding label in the breathing circuit diagram.

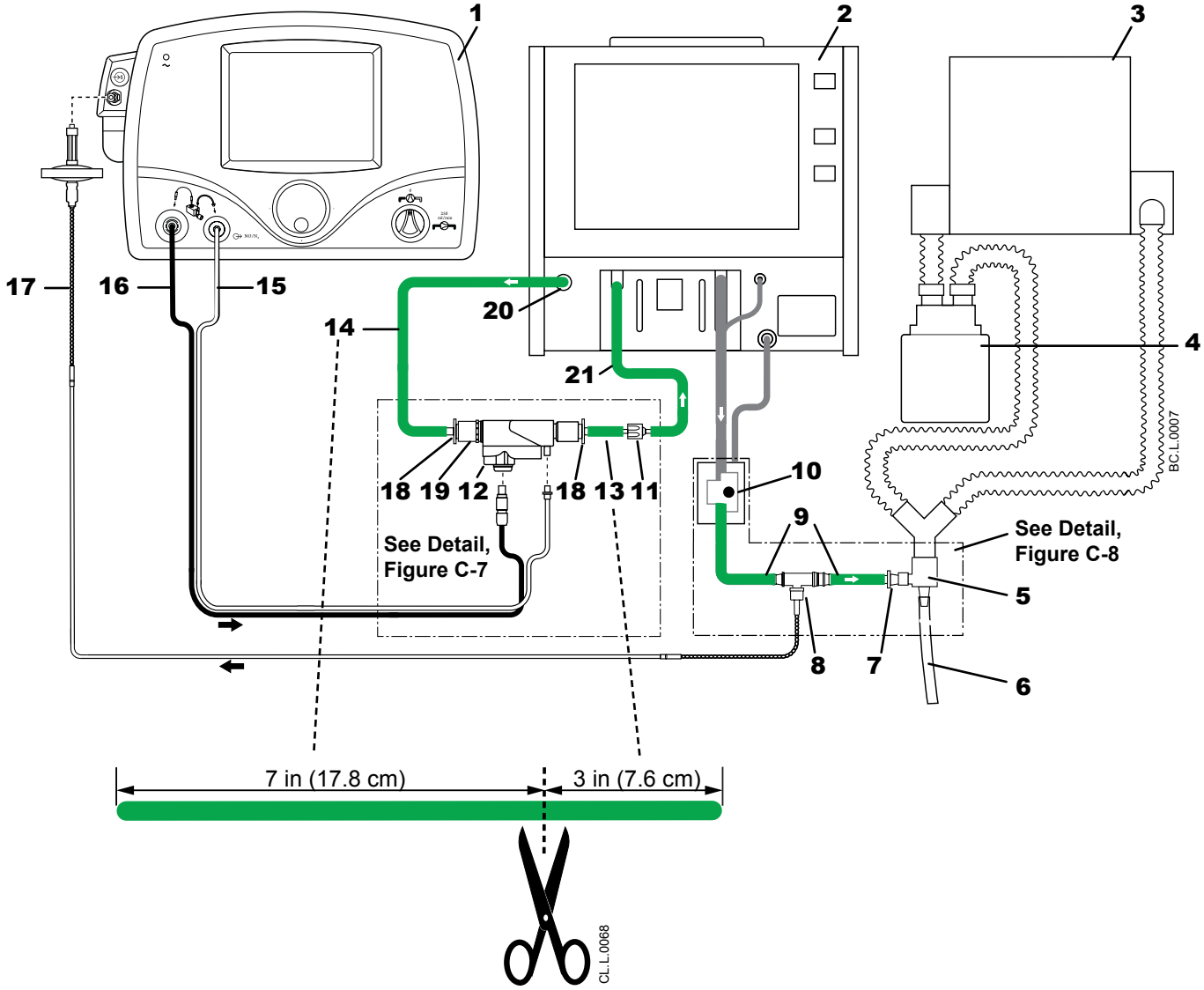

1. INOmax DS_{IR} Plus
2. Bunnell Life Pulse
3. Conventional Ventilator
4. Humidifier
5. Life Port Adapter
6. Endotracheal Tube
7. Tapered Life Port Adapter

*8. Sample Tee

9. Life Pulse Patient Breathing Circuit
10. Patient Box

*11. One-Way Valve

12. Injector Module

*13. Convenience Pack Natvar Tubing (cut to approximately 3 inches (7.6 cm))

*14. Convenience Pack Natvar Tubing (cut to approximately 7 inches (17.8 cm))

15. NO/N_2 Injector Tube
16. Injector Module Electrical Cable
17. Patient Gas Sample Line and Filter

*18. 15M X 4.5 mm I.D. Adapter

*19. 22M/15F X 22M/15F Adapter

20. Bunnell GAS OUT Connection
21. Natvar Tubing removed from GAS OUT Connection

Figure C-6 Life Pulse High Frequency Ventilator circuit diagram

NOTE: There is additional information about the Bunnell Life Pulse Circuit on the next page.

Instructions:

1. Cut the Natvar tubing from the Bunnell Life Pulse Disposable Adapters Convenience Pack into two pieces; one piece approximately 7 inches (17.8 cm) long (**14**) and the other piece approximately 3 inches (7.6 cm) long (**13**).
2. Attach the two pieces of tubing, adapters (**18, 19**) and the one-way valve (**11**) to the Injector Module (**12**).
3. Remove the green Natvar tubing from the Life Pulse GAS OUT Connection (**20**) on the front of the Life Pulse (see Figure C-6).
4. Connect the end of the removed tubing (**21**) to the one-way valve (**11**).
5. Connect the convenience pack Natvar tubing (**14**) to the Life Pulse GAS OUT connection (**20**) on the front of the Life Pulse (see Figure C-6).

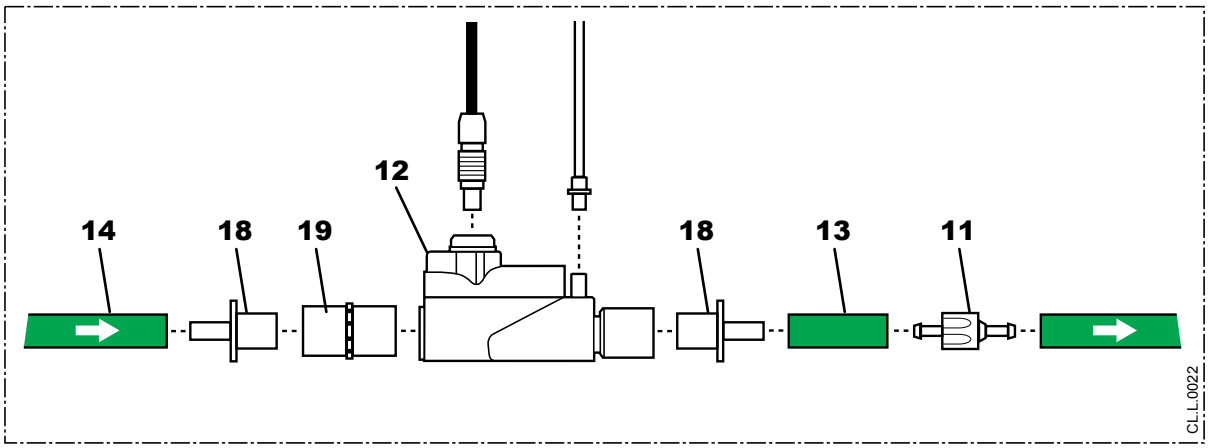

Figure C-7 Injector Module Connections

NOTE: There is additional information about the Bunnell Life Pulse Circuit on the next page.

6. Cut the green Natvar tubing (**9**) supplied in the Life Pulse breathing circuit between the patient box (**10** in Figure C-8) and the tapered Life Port adapter (**7**) at the midpoint, about 6 inches (15.2 cm) from the Life Port Adapter (**5**).
7. Connect the cut ends of the Natvar tubing to the Gas Sample Tee (**8**).
8. Connect the Patient Gas Sample Line and Filter (**17**) to the Luer connector on the Gas Sample Tee (**8**).

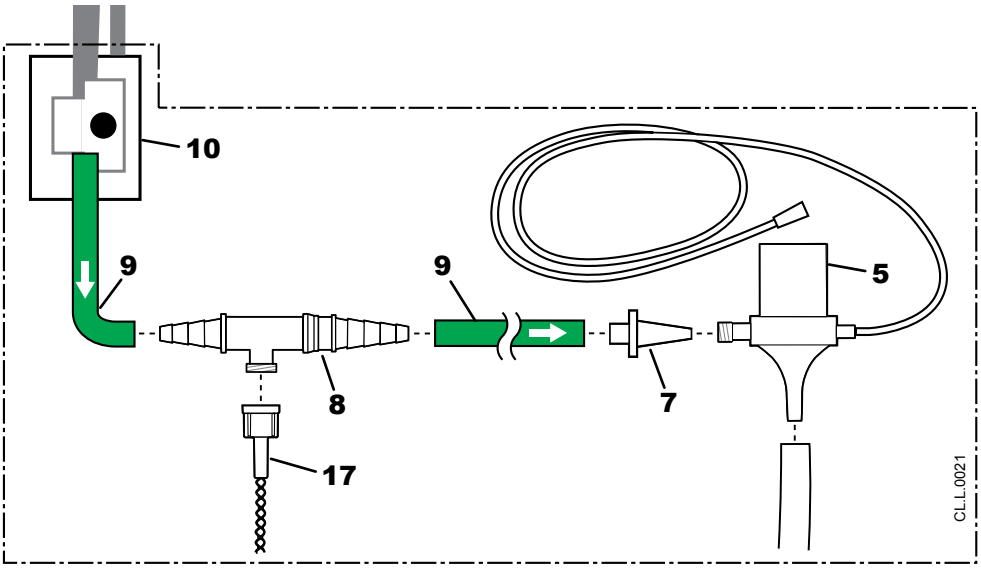

Figure C-8 Patient Gas Sample Line Connections

C.4 Fisher & Paykel Healthcare

C.4.1 Bubble CPAP

NOTE: Refer to Fisher & Paykel user instructions for required parts and appropriate set up.

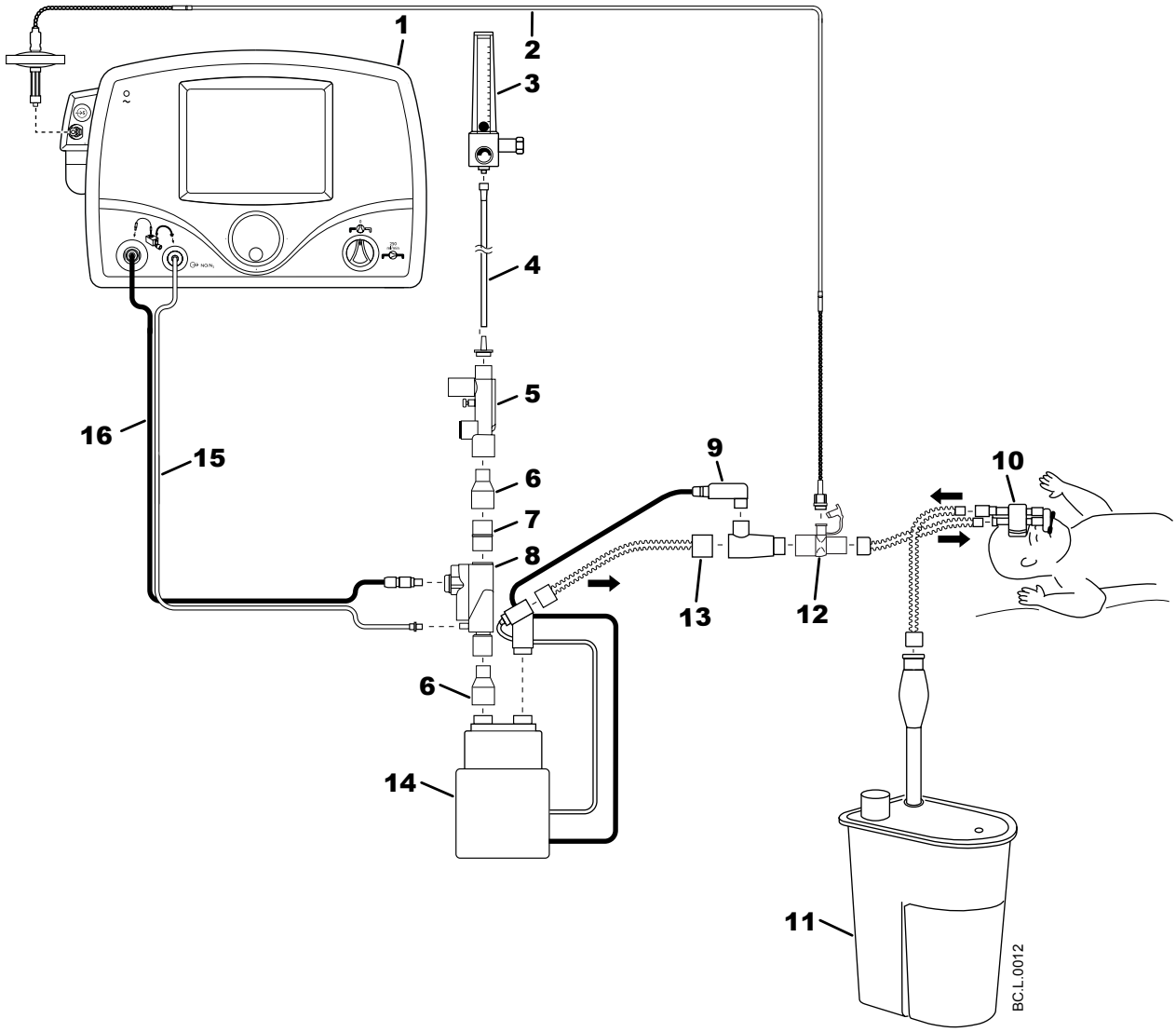

1. INOmax DS_{IR} Plus
2. Patient Gas Sample Line and Filter
3. O_2 Source
4. O_2 Tubing
5. Bubble CPAP Pressure Manifold (White)
6. 22F X 15M Adapter
7. 22M/15F X 22M/15F Adapter
8. Injector Module
9. Temperature Probe
10. Nasal Prong Infant Interface
11. Bubble CPAP Generator
12. F/P Inline Infant Nebulizer Kit (RT010) Adapter
13. Breathing Circuit
14. MR850 Humidifier
15. NO/N2 Injector Tube
16. Injector Module Electrical Cable

Figure C-9 Bubble CPAP circuit diagram

C.4.2 RT329 Breathing Circuit and BC Nasal Cannula

NOTE: Refer to Fisher & Paykel user instructions for required parts and appropriate set up.

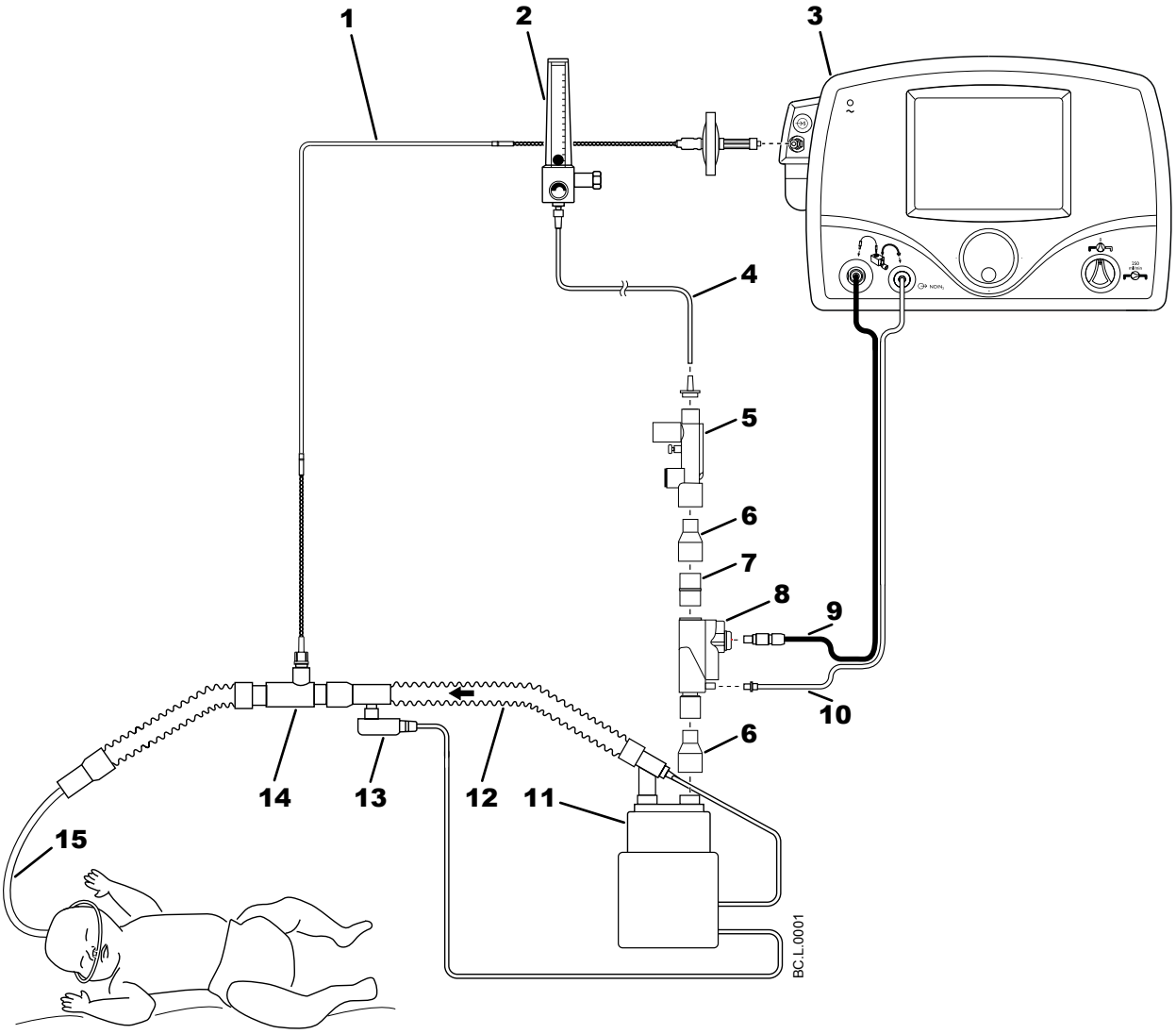

1. Patient Gas Sample Line and Filter
2. O_2 Source
3. INOmax DS_{IR} Plus
4. O_2 Tubing
5. Pressure Relief Manifold
6. 22F X 15M Adapter
7. 22M/15F X 22M/15F Adapter
8. Injector Module
9. Injector Module Electrical Cable
10. NO/N2 Injector Tube
11. MR850 Humidifier
12. Breathing Circuit
13. Temperature Probe
14. Gas Sample Tee
15. Nasal Cannula

Figure C-10 RT329 Breathing Circuit and BC Nasal Cannula circuit diagram

C.4.3 RT202 Breathing Circuit & Optiflow Adult Interface

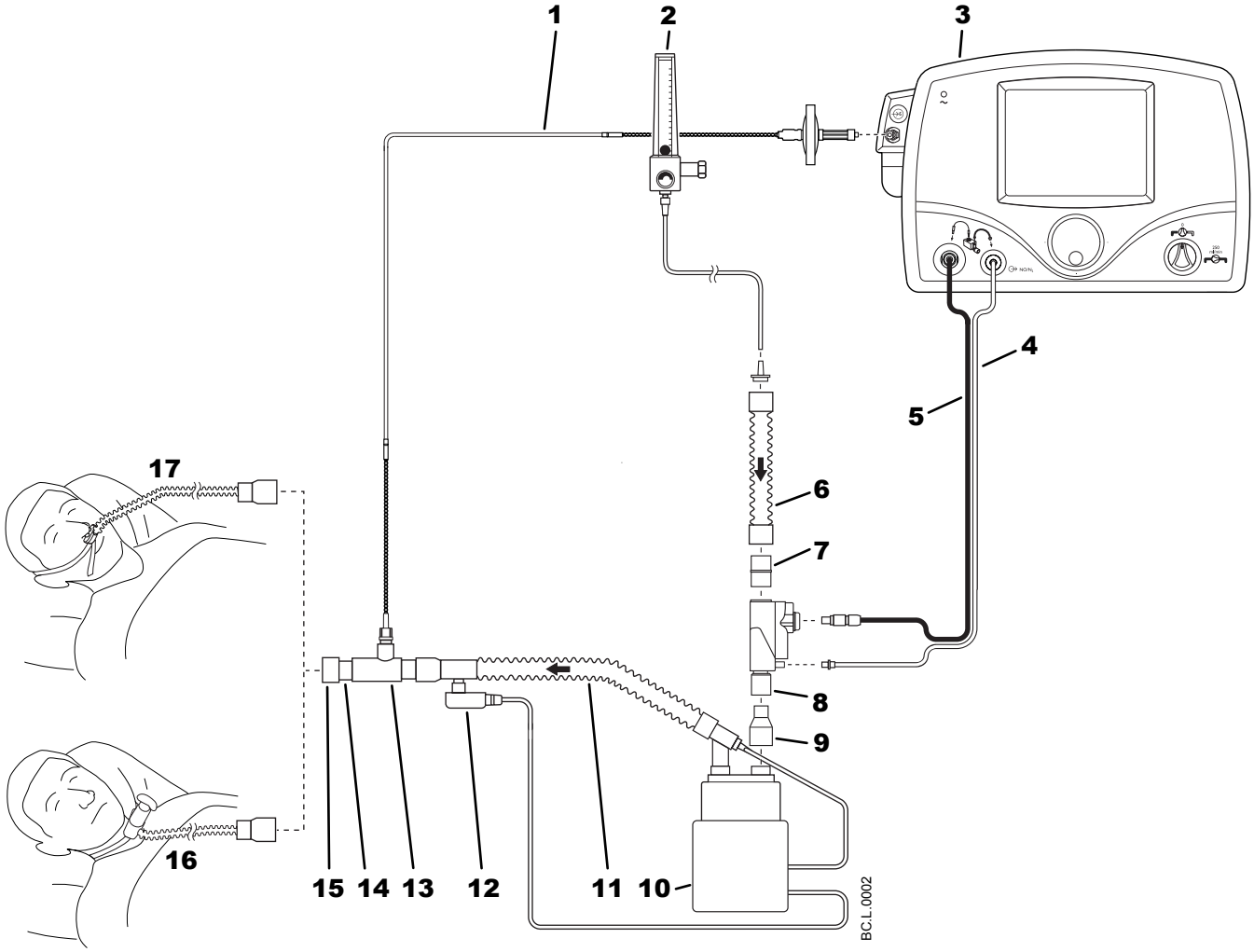

1. Patient Gas Sample Line and Filter
2. O_2 Source
3. INOmax DS_{IR} Plus
4. NO/N2 Injector Tube
5. Injector Module Electrical Cable
6. Breathing Circuit Hose
7. 22M/15F X 22M/15F Adapter
8. Injector Module
9. 22F X 15M Adapter
10. MR850 Humidifier
11. Breathing Circuit
12. Temperature Probe
13. Gas Sample Tee
14. 22M/15F X 22M/15F Adapter
15. 22 mm ID X 22 mm ID Cuff Adapter
16. Optiflow Tracheostomy
17. Optiflow Nasal Cannula

Figure C-11 RT202 Breathing Circuit & Optiflow Adult Interface circuit diagram

C.4.4 RT330 Breathing Circuit & Optiflow Jr

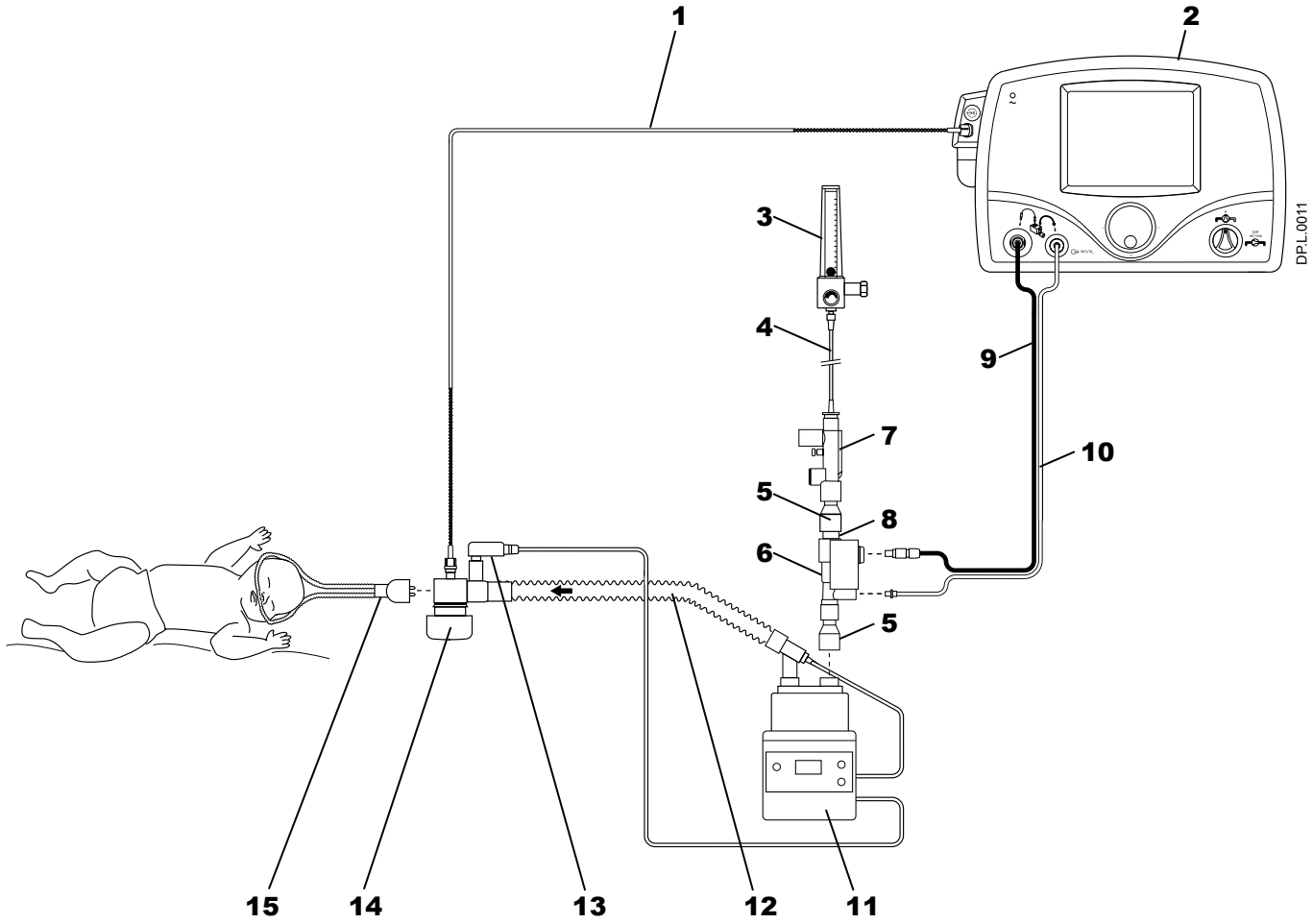

1. Patient Gas Sample Line and Filter
2. INOmax DS_{IR} Plus
3. Oxygen Source
4. Oxygen Tubing
5. 22F X 15M Adapter
6. Injector Module
7. Pressure Relief Manifold
8. 22M/15F X 22M/15F Adapter
9. Injector Module Electrical Cable
10. NO/N_2 Injector Tube
11. Humidifier
12. Breathing Circuit
13. Temperature Probe
14. Optiflow Junior Adapter (REF: OPT016)
15. Optiflow Junior Nasal Cannula

Figure C-12 RT330 Breathing Circuit & Optiflow Jr circuit diagram

C.4.5 Airvo 2 Breathing Circuit

The Airvo 2 has a flow generator internal to the device. The flow generator creates high flow rates which will enter through the filter on the back of the device before passing through the enclosed humidifier. Adding oxygen through the oxygen inlet port (see Figure 1 below) allows for supplementing the FiO_2 being delivered to the patient, but may not account for all of the gas flow going to the patient.

To combat room air from entering through the filter cover and diluting the nitric oxide level coming from the injector module, an air/oxygen blender must be used to drive the flow through the injector module and into the oxygen inlet hose (see #11 in Figure 1).

By matching the flow rate on the air/oxygen blender with the flow setting on the Airvo 2, the monitored dose will equal the set dose.

CAUTION

Failure to match the air/oxygen blender flow rate with the Airvo 2 flow setting, will result in INOMAX levels delivered to the patient that are lower than the set dose.

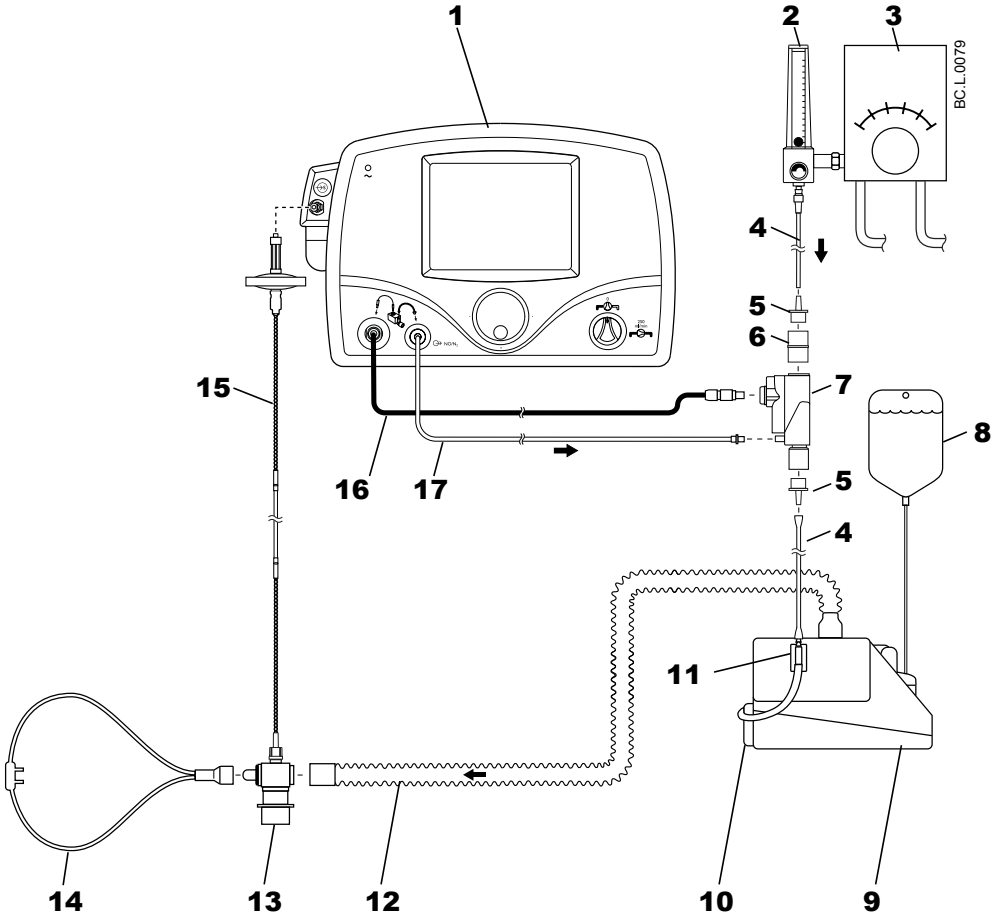

1. INOmax DS_{IR} Plus
2. Oxygen Source
3. Air/Oxygen Blender
4. Oxygen Tubing
5. 15M x 4.5 mm Adapter
6. 22M/15F X 22M/15F Adapter
7. Injector Module
8. Water Bag
9. Fisher & Paykel Airvo 2
10. Filter Cover
11. Oxygen Inlet Port
12. Inspiratory Breathing Circuit Hose
13. Optiflow Jr Adapter (OPT016)
14. Cannula
15. Patient Gas Sample Line and Filter
16. Injector Module Electrical Cable
17. NO/N_2 Injector Tube

Figure C-13 Airvo 2 Infant/Pediatric circuit diagram

C.5 Hamilton Medical

C.5.1 Arabella Nasal CPAP

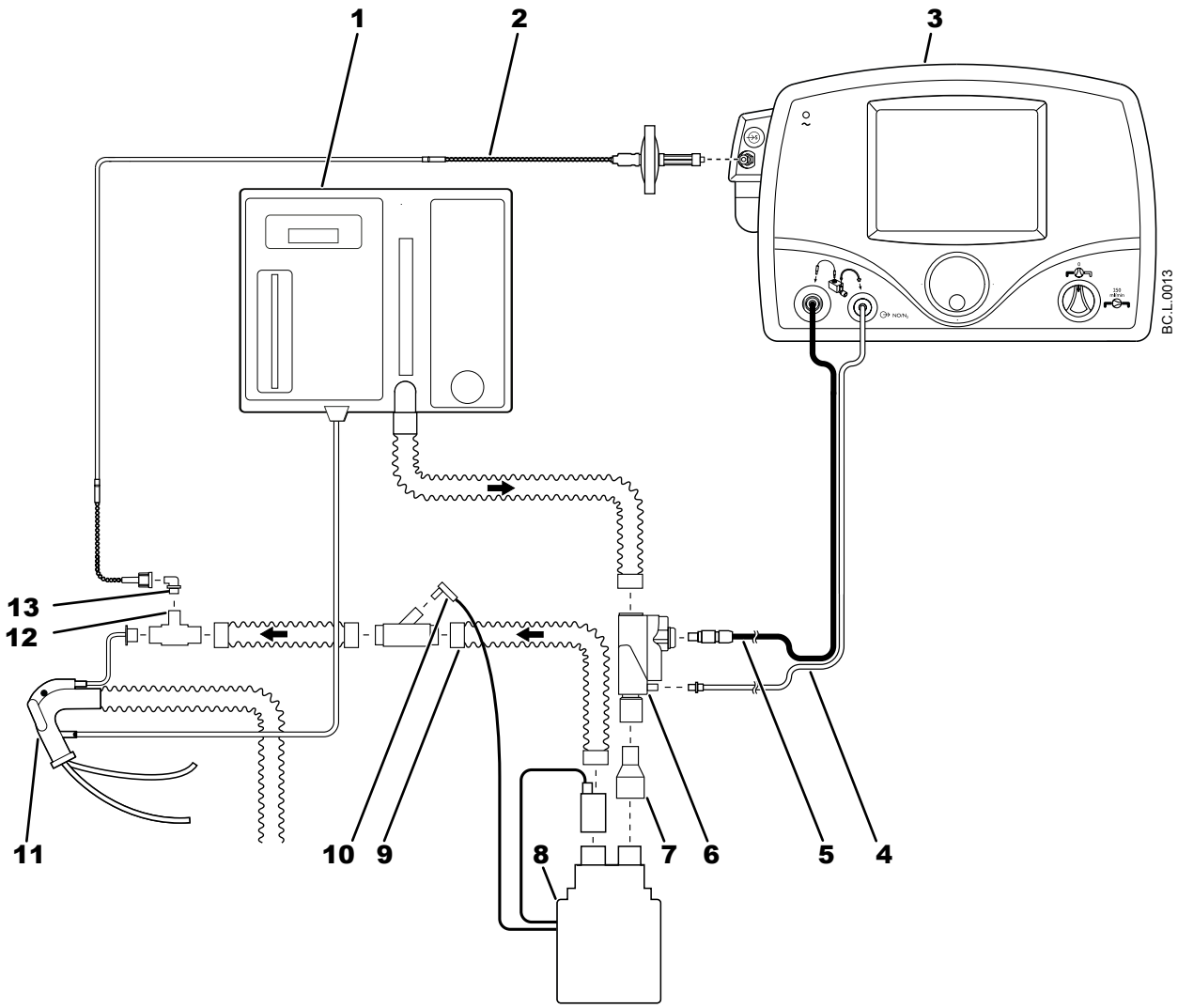

1. Arabella
2. Patient Gas Sample Line and Filter
3. INOmax DS_{IR} Plus
4. NO/N_2 Injector Tube
5. Injector Module Electrical Cable
6. Injector Module
7. 22F X 15M Adapter
8. Humidifier
9. Heated Delivery Circuit
10. Temperature Probe
11. Universal Generator
12. Arabella Sample Tee
13. 90 Degree Sample Port Adapter

Figure C-14 Arabella Nasal CPAP circuit diagram

C.6 Teleflex Medical OEM

C.6.1 Comfort Flo Humidification System

NOTE: A second temperature probe connector is required from Teleflex to attach to the INOmax DS_{IR} Plus Sample Line.

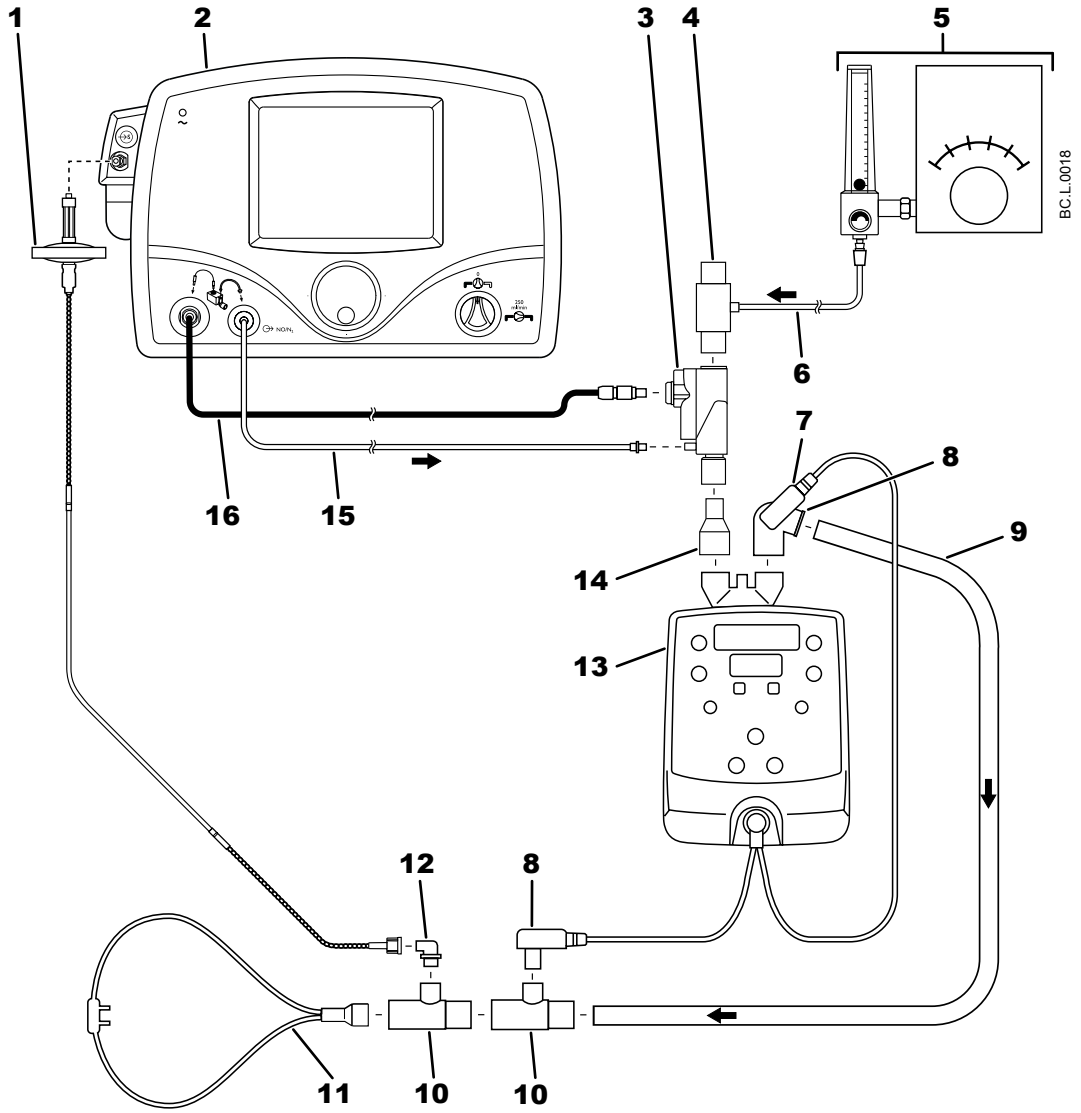

1. Patient Gas Sample Line and Filter
2. INOmax DS_{IR} Plus
3. Injector Module
4. System Pressure Relief Valve
5. Air/O_2 Blender or O_2 Blender
6. O_2 Tubing
7. Temperature Probe (Short Cable)
8. Angled 22 mm Connector
9. Patient Circuit
10. Temperature Probe Connector
11. Comfort Flo Cannula
12. 90 Degree Sample Port Adapter
13. ConchaTherm Heated Humidifier
14. 22F X 15M Adapter
15. NO/N_2 Injector Tube
16. Injector Module Electrical Cable

Figure C-15 Comfort Flo Humidification circuit diagram

C.7 Vapotherm Inc.

C.7.1 2000i Respiratory Hydration Vapor Therapy

The INOmax DS_{IR} Plus adds NO/N_2 gas flow to the breathing circuit flow in proportion to the NO setting (up to 10% at 80 ppm) and subtracts gas from the breathing circuit via gas sampling at a nominal flow rate of 0.23 L/min.

These effects impact the delivered gas flow rate when using the Vapotherm 2000i. It is recommended that after an NO setting change the user checks the delivered gas flow rate and adjusts the gas source flow rate as necessary.

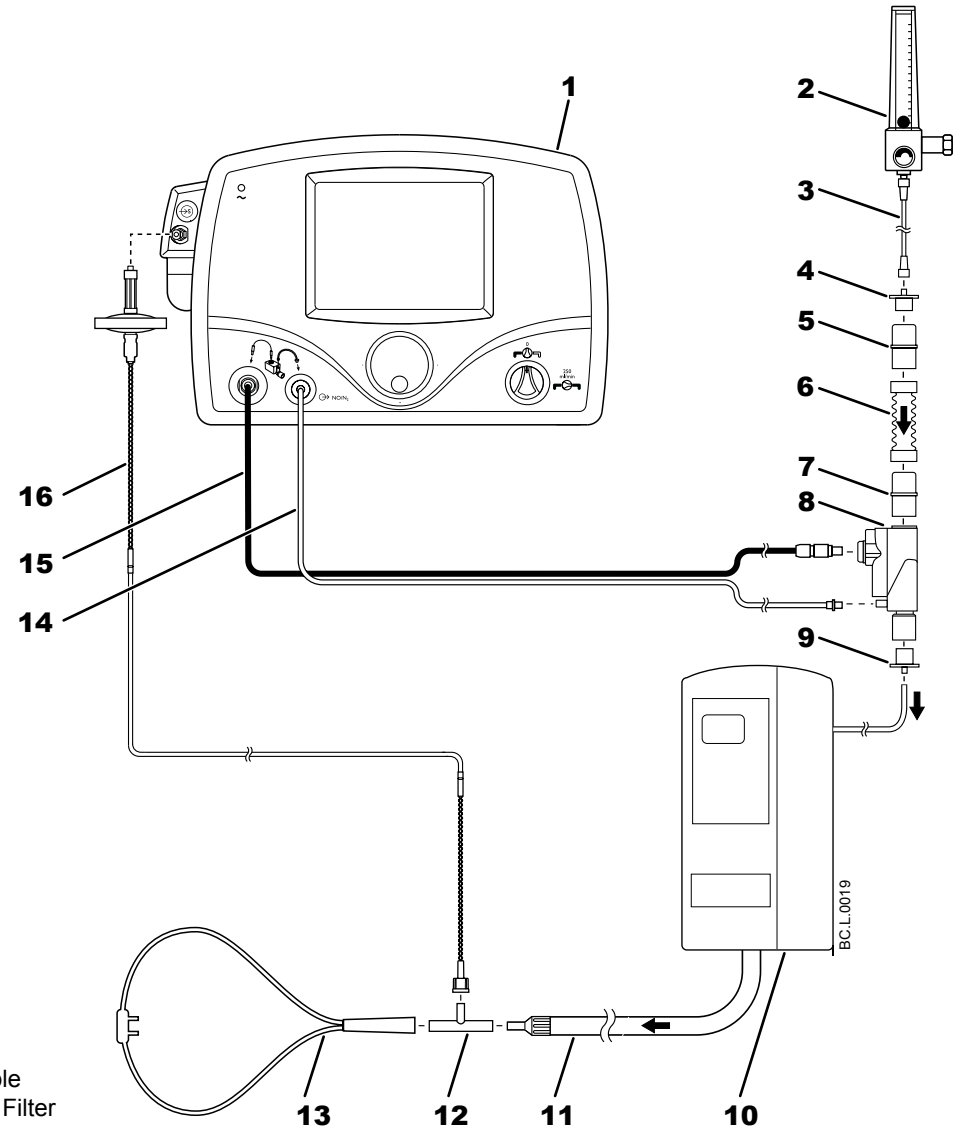

1. INOmax DS_{IR} Plus
2. O_2 Flowmeter
3. O_2 Tubing
4. 15M x 4.5 mm Adapter
5. 22M/15F x 22M/15F Adapter
6. 300 mm of 22 mm Hose
7. 22M/15F x 22M/15F Adapter
8. Injector Module
9. 15M x 4.5 mm Adapter
10. Vapotherm 2000i
11. Patient Delivery Tube
12. O_2 Tubing Sample Tee
13. Patient Cannula
14. NO/N_2 Injector Tube
15. Injector Module Electrical Cable
16. Patient Gas Sample Line and Filter

Figure C-16 2000i Respiratory Hydration Vapor Therapy circuit diagram

C.7.2 Precision Flow

The INOmax DS_{IR} Plus adds INOMAX gas flow to the breathing circuit flow in proportion to the NO setting (up to 10% at 80 ppm) and subtracts gas from the breathing circuit via gas sampling at a nominal flow rate of 0.23 L/min.

These effects impact the delivered gas flow rate when the Vapotherm Precision Flow is used. After the NO setting is changed, check the delivered gas flow rate and adjust the gas source flow rate as necessary.

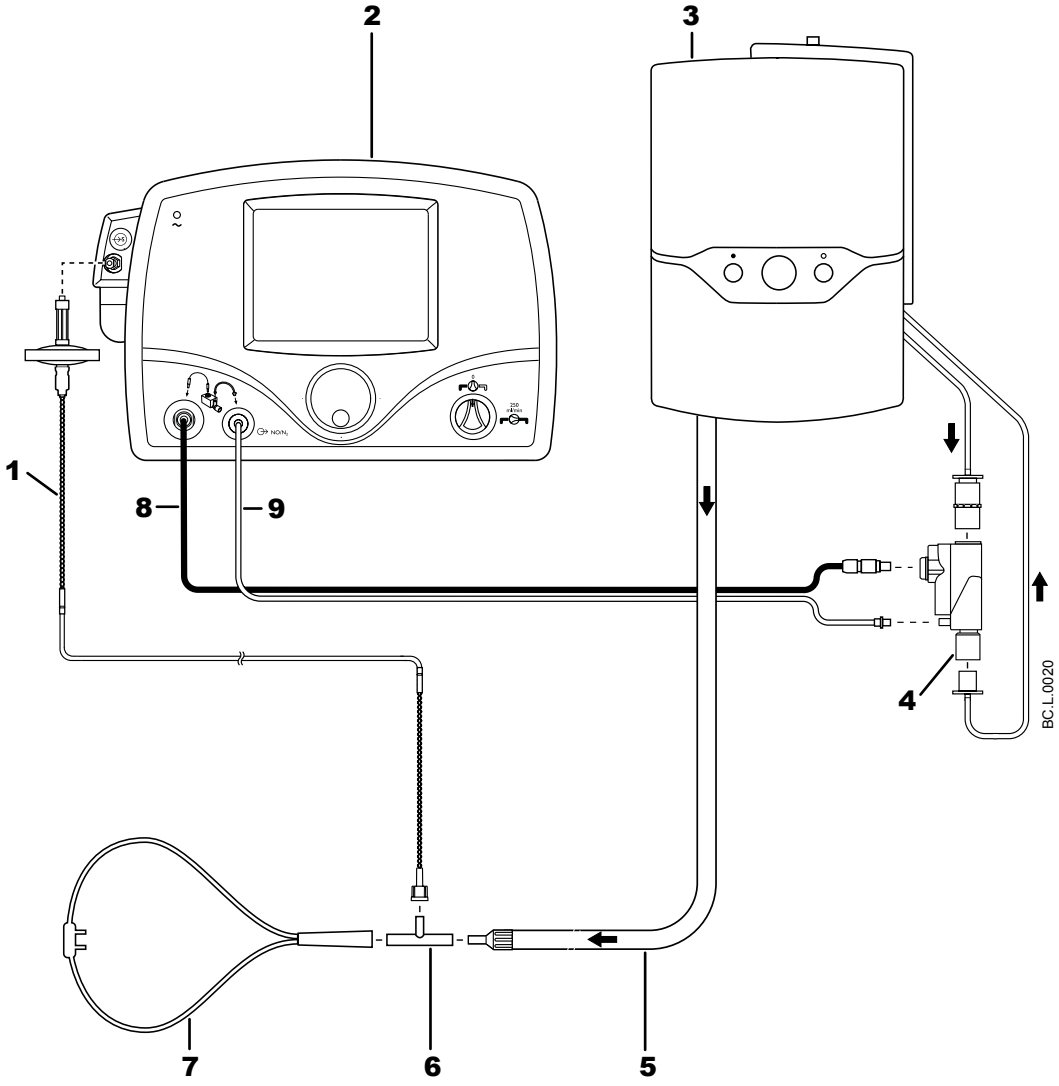

1. Patient Gas Sample Line and Filter
2. INOmax DS_{IR} Plus
3. Precision Flow Unit
4. Injector Module
5. Patient Delivery Tube
6. O_2 Tubing Sample Tee
7. Patient Cannula
8. Injector Module Electrical Cable
9. NO/N2 Injector Tube

Figure C-17 Precision Flow circuit diagram

D Appendix D - Gas Delivery Systems Used Outside the U.S.

(Validated for use with INOmax DS_{IR} Plus)

Table D-1 Gas Delivery Systems Validated for use Outside the U.S.*

Manufacturer (At Time of Validation)	Model	Gas Delivery System's Range Tested (Neonatal)	Gas Delivery System's Range Tested (Pediatric/ Adult)
Acutronics Medical Systems AG	Fabian +nCPAP Evolution ‡	●	N/A
Acutronics Medical Systems AG	Fabian HFO ‡	●	N/A
Acutronics Medical Systems AG	Fabian HFOi ‡	●	N/A
Acutronics Medical Systems AG	Fabian Therapy ‡	●	N/A
Dräger	Evita Babylog VN500 ‡	●	N/A
Dräger	Zeus	●	●
Infrasonics	Infant Star 950	●	N/A
Metran	Humming HMX ‡	●	N/A
Metran	Humming Vue ‡	●	N/A
SLE Life Support	SLE 5000 ‡	●	N/A

NOTES:

* These ventilators/gas delivery systems are not available in the United States.

‡ A circuit diagram for this gas delivery system follows this table.

D.1 Acutronic Medical Systems AG

D.1.1 Fabian +nCPAP Evolution

WARNING

The INOmax DS_{IR} Plus subtracts gas from the breathing circuit via the gas sampling system at a rate of 230 mL per minute. This can adversely affect the sensitivity of a flow-triggered synchronized breath mode of some gas delivery systems. Always check the trigger sensitivity of the gas delivery system after connecting the INOmax DS_{IR} Plus to the breathing circuit.

CAUTIONS

To reduce the possibility of incorrect flow measurement, ensure the Injector Module is on the dry side of the breathing circuit (prior to the humidifier).

Avoid medications interfering with the gas monitoring system; administer any aerosolized medications distal to the sampling tee.

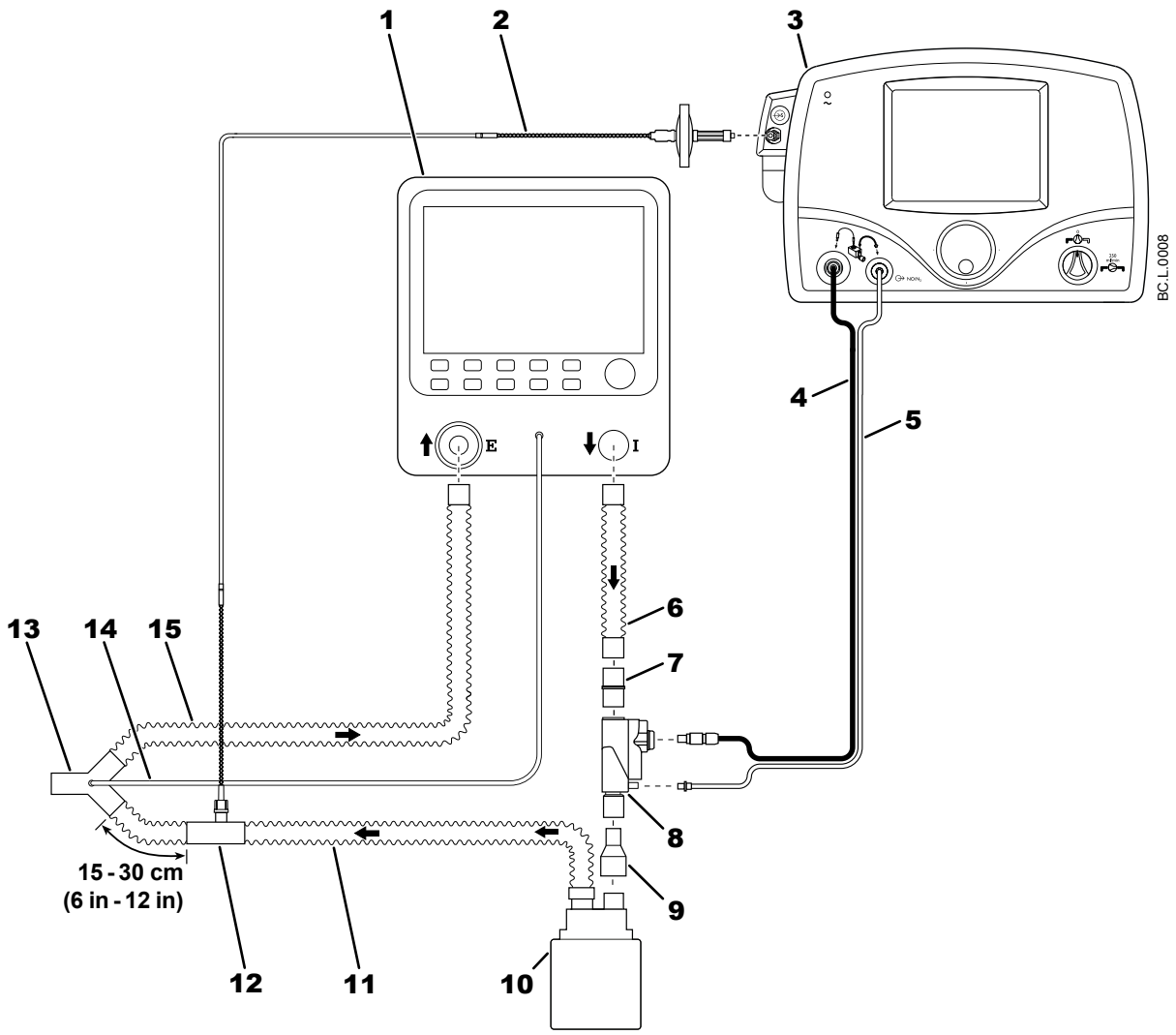

1. Fabian+ nCPAP Evolution
2. Patient Gas Sample Line and Filter
3. INOmax DS_{IR} Plus
4. Injector Module Electrical Cable
5. NO/N_2 Injector Tube
6. Connecting Tube (15 inches)
7. 22M/15F X 22M/15F Adapter
8. Injector Module
9. 22F X 15M Adapter
10. Humidifier
11. Inspiratory Breathing Circuit Hose
12. Gas Sample Tee
13. Patient Wye
14. Proximal Pressure Tube
15. Expiratory Breathing Circuit Hose

Figure D-1 Fabian +nCPAP Evolution circuit diagram

D.1.2 Fabian HFO Ventilator (High Frequency Mode)

WARNING

Do not use dose settings above 40 ppm. Bidirectional flow through the Injector Module may cause measured NO values greater than 100 ppm.

NOTES:

- Only use the circuit configuration below.
- Connect the Injector Module directly to the inspiratory outflow port on the front of the ventilator to prevent over-delivery from bidirectional flow during HFOV (high frequency oscillatory ventilation) from connection #7, Figure D-2.
- Do not use a one-way valve distal to the Injector Module.

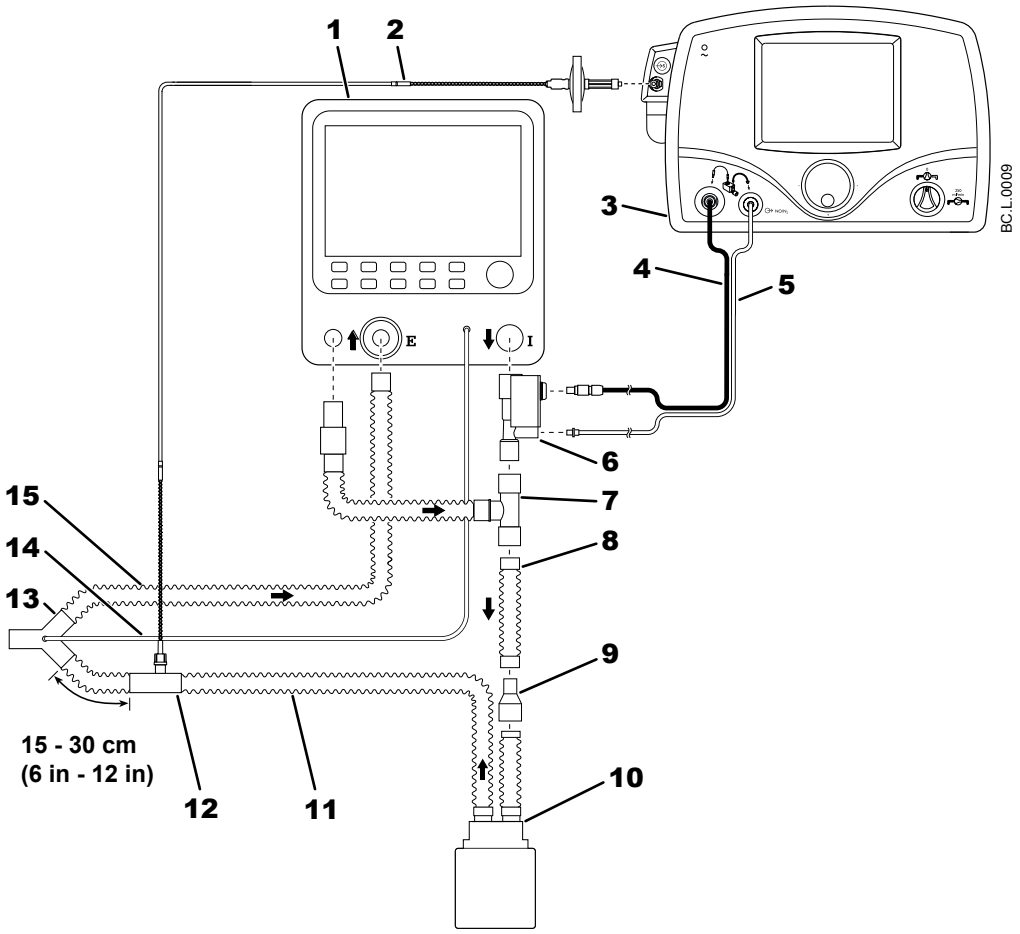

1. Fabian HFO Ventilator
2. Patient Gas Sample Line and Filter
3. INOmax DS_{IR} Plus
4. Injector Module Electrical Cable
5. NO/N2 Injector Tube
6. Injector Module
7. T-Connector Assembly, #7209.e
8. Connecting Tube (38 cm/15 inches)
9. 22F X 15M Adapter
10. Humidifier
11. Inspiratory Breathing Circuit Hose
12. Gas Sample Tee
13. Patient Wye
14. Proximal Pressure Tube
15. Expiratory Breathing Circuit Hose

Figure D-2 Fabian HFO Ventilator circuit diagram (high frequency mode only)

D.1.3 Fabian HFO Ventilator (Conventional Modes Only)

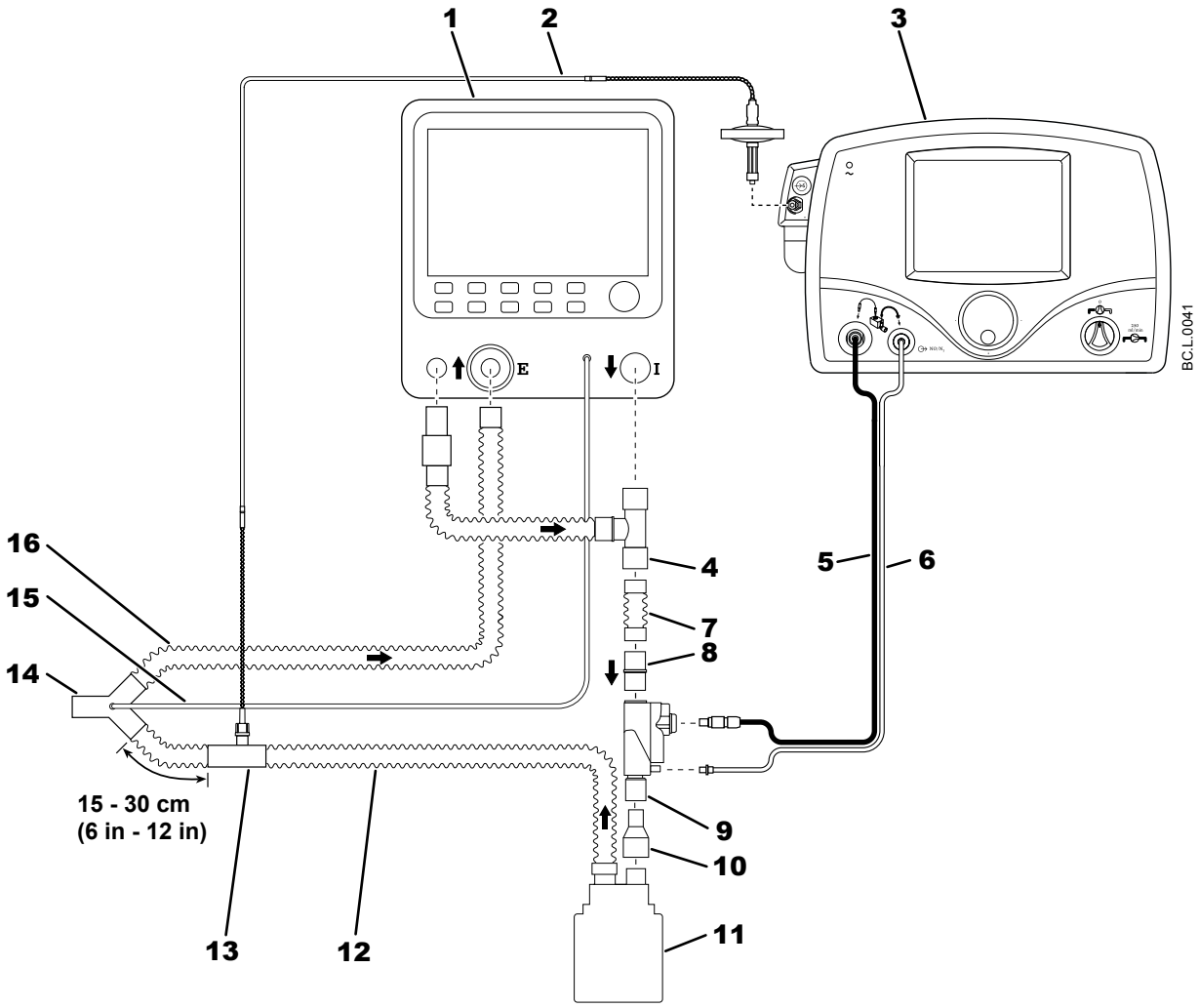

1. Fabian HFO Ventilator
2. Patient Gas Sample Line and Filter
3. INOmax DS_{IR} Plus
4. T-Connector Assembly, #7209.e
5. Injector Module Electrical Cable
6. NO/N2 Injector Tube
7. Connecting Tube (15 inches)
8. 22M/15F X 22M/15F Adapter
9. Injector Module
10. 22F X 15M Adapter
11. Humidifier
12. Inspiratory Breathing Circuit Hose
13. Gas Sample Tee
14. Patient Wye
15. Proximal Pressure Tube
16. Expiratory Breathing Circuit Hose

Figure D-3 Fabian HFO Ventilator circuit diagram (conventional mode only)

D.1.4 Fabian HFOi Ventilator (High Frequency Mode)

WARNING
A one-way valve is required between the Injector Module and the tee into the inspiratory limb of the breathing circuit to prevent high NO delivery.

NOTE: The “bias flow external” must be activated to direct gas flow through the Injector Module.

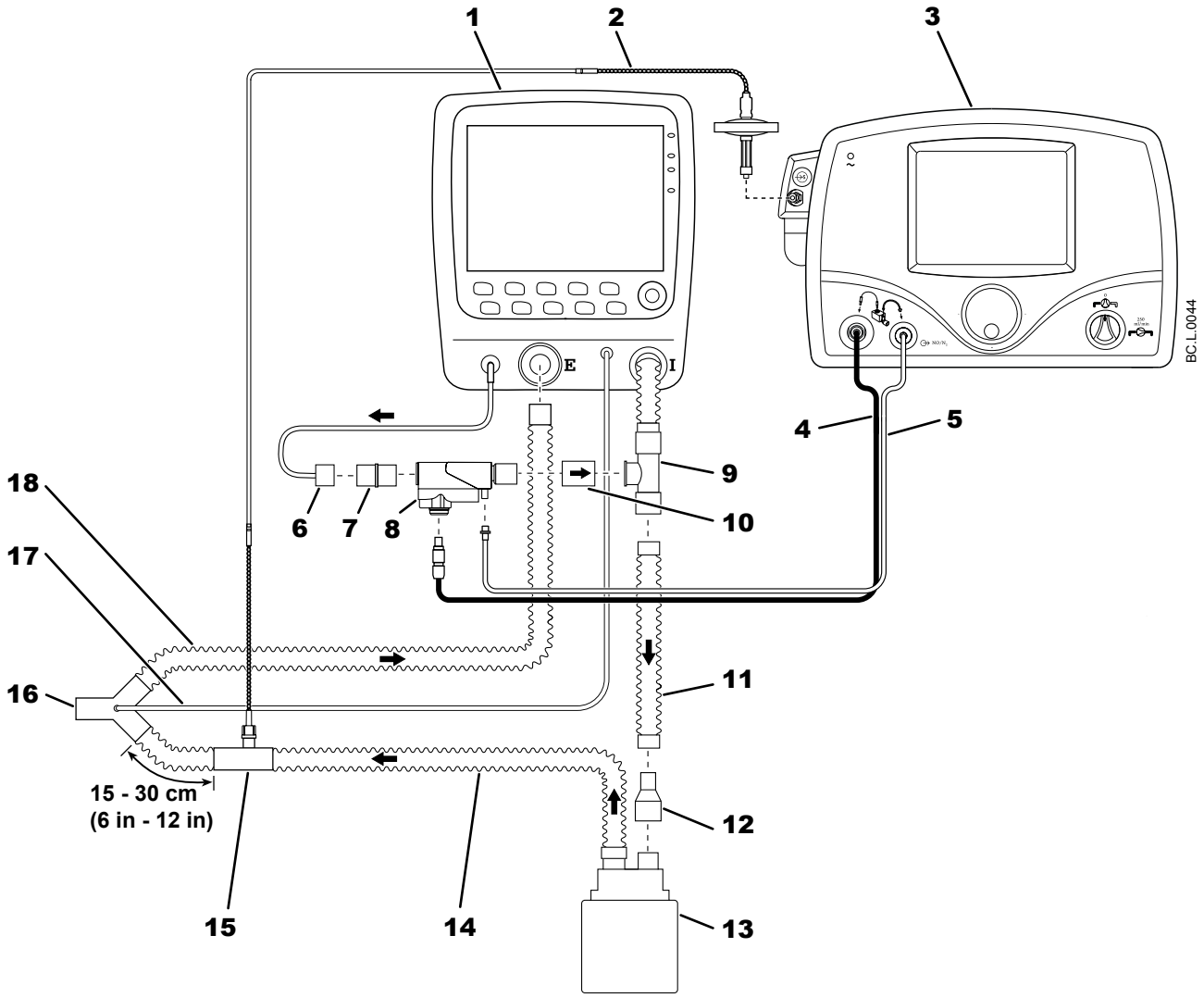

1. Fabian HFOi
2. Patient Gas Sample Line and Filter
3. INOmax DS_{IR} Plus
4. Injector Module Electrical Cable
5. NO/N_2 Injector Tube
6. nCPAP Adapter (REF 7067)
7. 22M/15F X 22M/15F Adapter
8. Injector Module
9. Tee Adapter
10. One-Way Valve
11. Connecting Tube
12. 22F X 15M Adapter
13. Humidifier
14. Inspiratory Breathing Circuit Hose
15. Gas Sample Tee
16. Patient Wye
17. Proximal Pressure Tube
18. Expiratory Breathing Circuit Hose

Figure D-4 Fabian HFOi Ventilator (high frequency mode) circuit diagram

D.1.5 Fabian HFOi Ventilator (Conventional Mode)

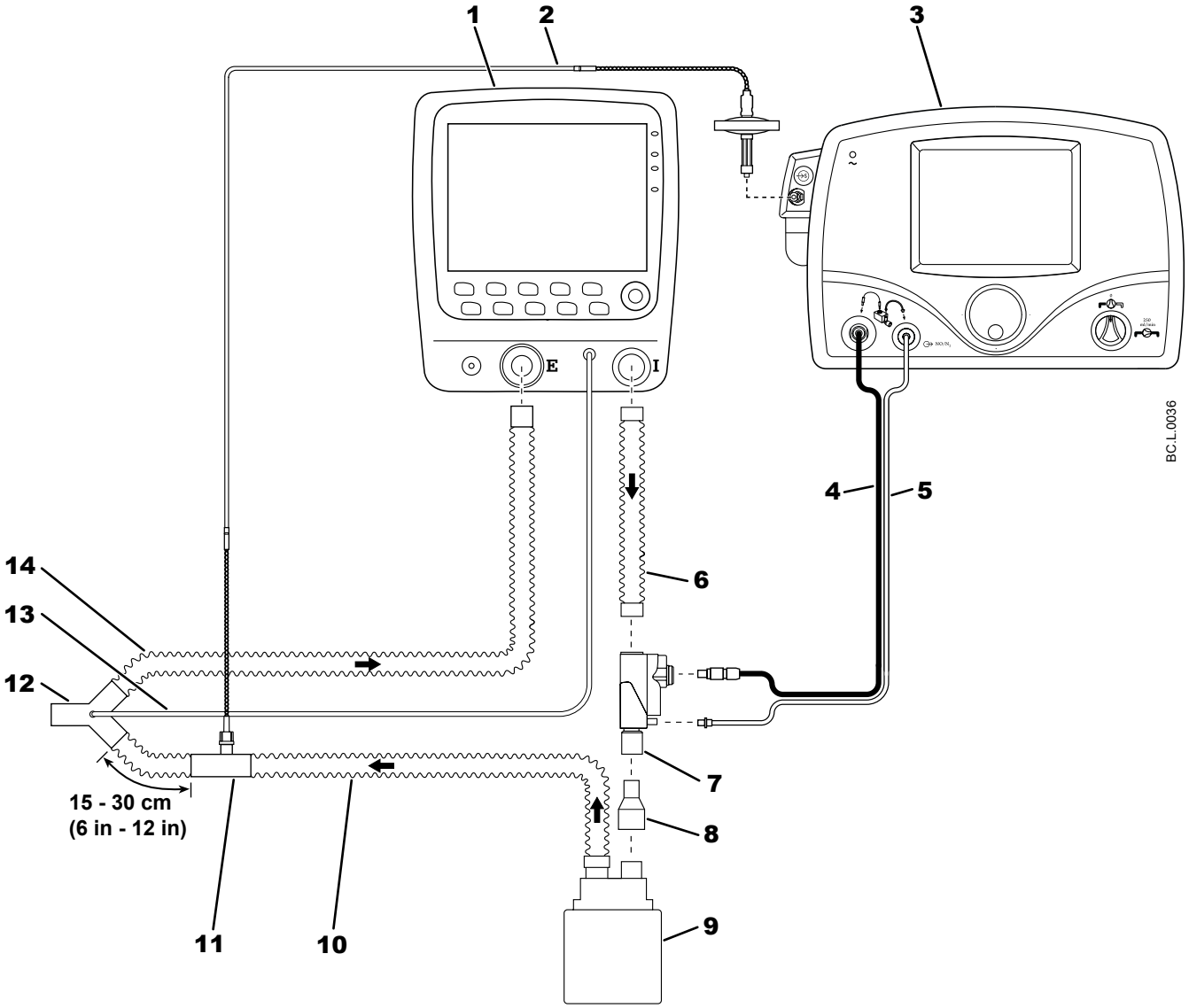

1. Fabian HFOi
2. Patient Gas Sample Line and Filter
3. INOmax DS_{IR} Plus
4. Injector Module Electrical Cable
5. NO/N_2 Injector Tube
6. Connecting Tube (approx. 24 in.)
7. Injector Module
8. 22F X 15M Adapter
9. Humidifier
10. Inspiratory Breathing Circuit Hose
11. Gas Sample Tee
12. Patient Wye
13. Proximal Pressure Tube
14. Expiratory Breathing Circuit Hose

Figure D-5 Fabian HFOi Ventilator (conventional mode) circuit diagram

D.1.6 Fabian Therapy

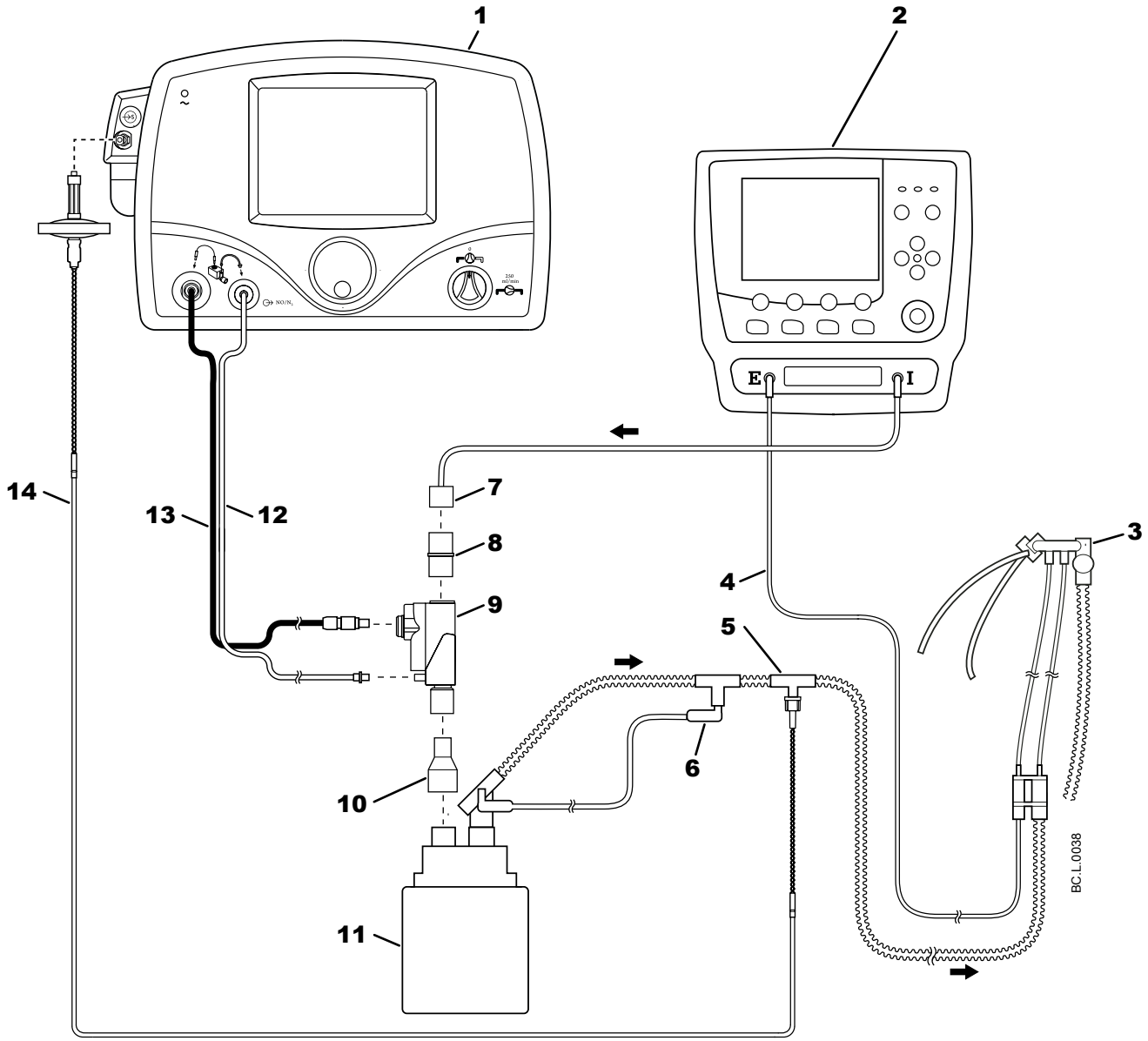

1. INOmax DS_{IR} Plus
2. Fabian Therapy
3. Infant CPAP Generator
4. Pressure Monitoring Tube
5. Gas Sample Tee
6. Temperature Probe
7. Infant Flow Connection Tube (REF 7067)
8. 22M/15F X 22M/15F Adapter
9. Injector Module
10. 22F X 15M Adapter
11. Humidifier
12. NO/N2 Injector Tube
13. Injector Module Electrical Cable
14. Patient Gas Sample Line and Filter

Figure D-6 Fabian Therapy circuit diagram

D.2 Dräger

D.2.1 Babylog VN500/Infinity Acute Care System

WARNING

Do not omit the one-way valve. This can result in high NO delivery outside of product specifications.

NOTE: Use a one-way valve when ventilating during the HFOV (high frequency oscillatory ventilation) mode.

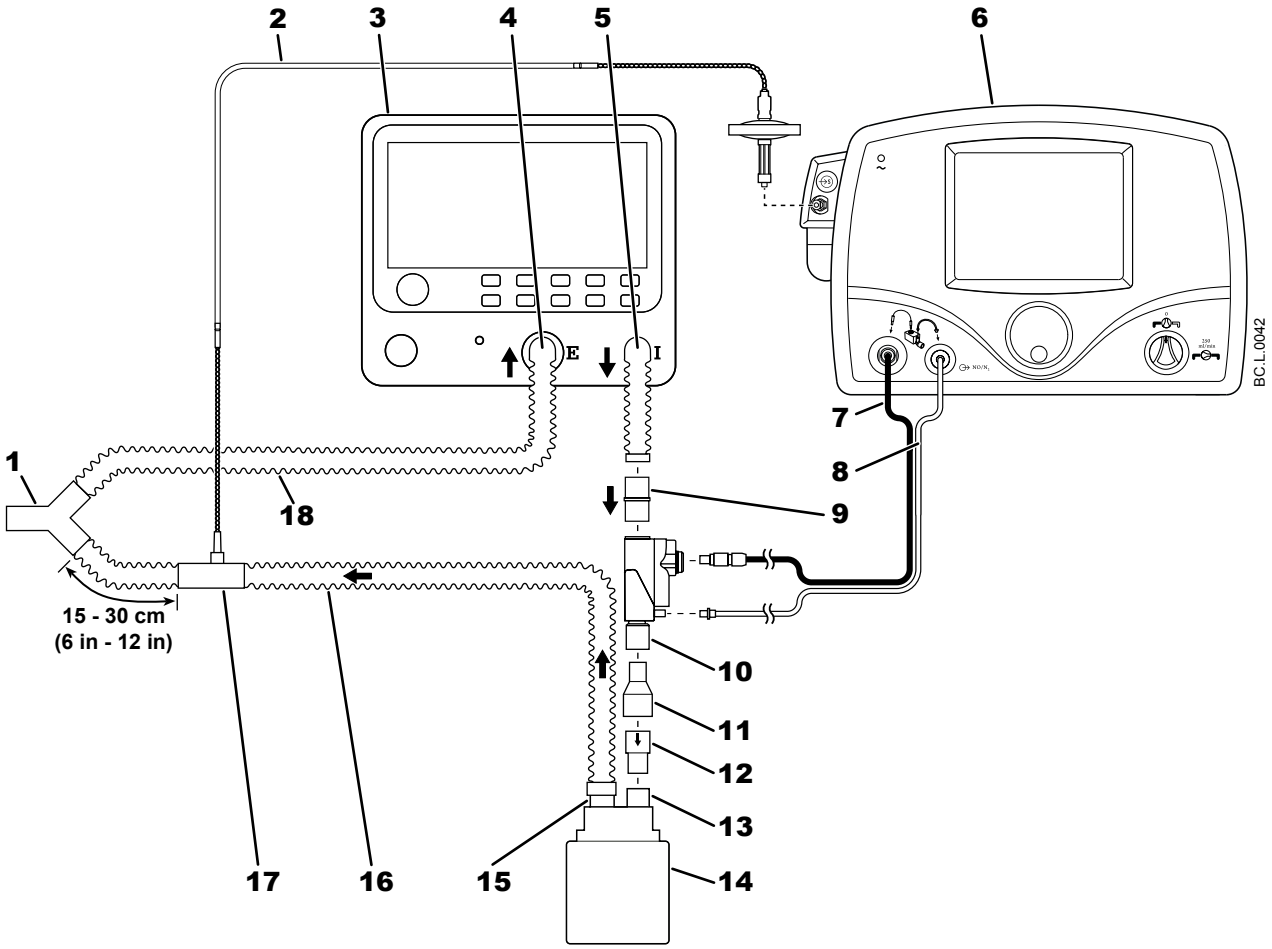

1. Patient wye
2. Patient Gas Sample Line and Filter
3. Dräger Babylog VN500 Ventilator
4. Ventilator Expiratory Port
5. Ventilator Inspiratory Port
6. INOmax DS_{IR} Plus
7. Injector Module Electrical Cable
8. NO/N2 Injector Tube
9. 22M/15F X 22M/15F Adapter
10. Injector Module
11. 22F X 15M Adapter
12. One-Way Valve
13. Humidifier Inlet
14. Humidifier
15. Humidifier Outlet
16. Inspiratory Breathing Circuit Hose
17. Gas Sample Tee
18. Expiratory Breathing Circuit Hose

Figure D-7 Babylog VN500 /Infinity Acute Care system circuit diagram

D.3 Metran Co., Ltd.

D.3.1 Humming HMX

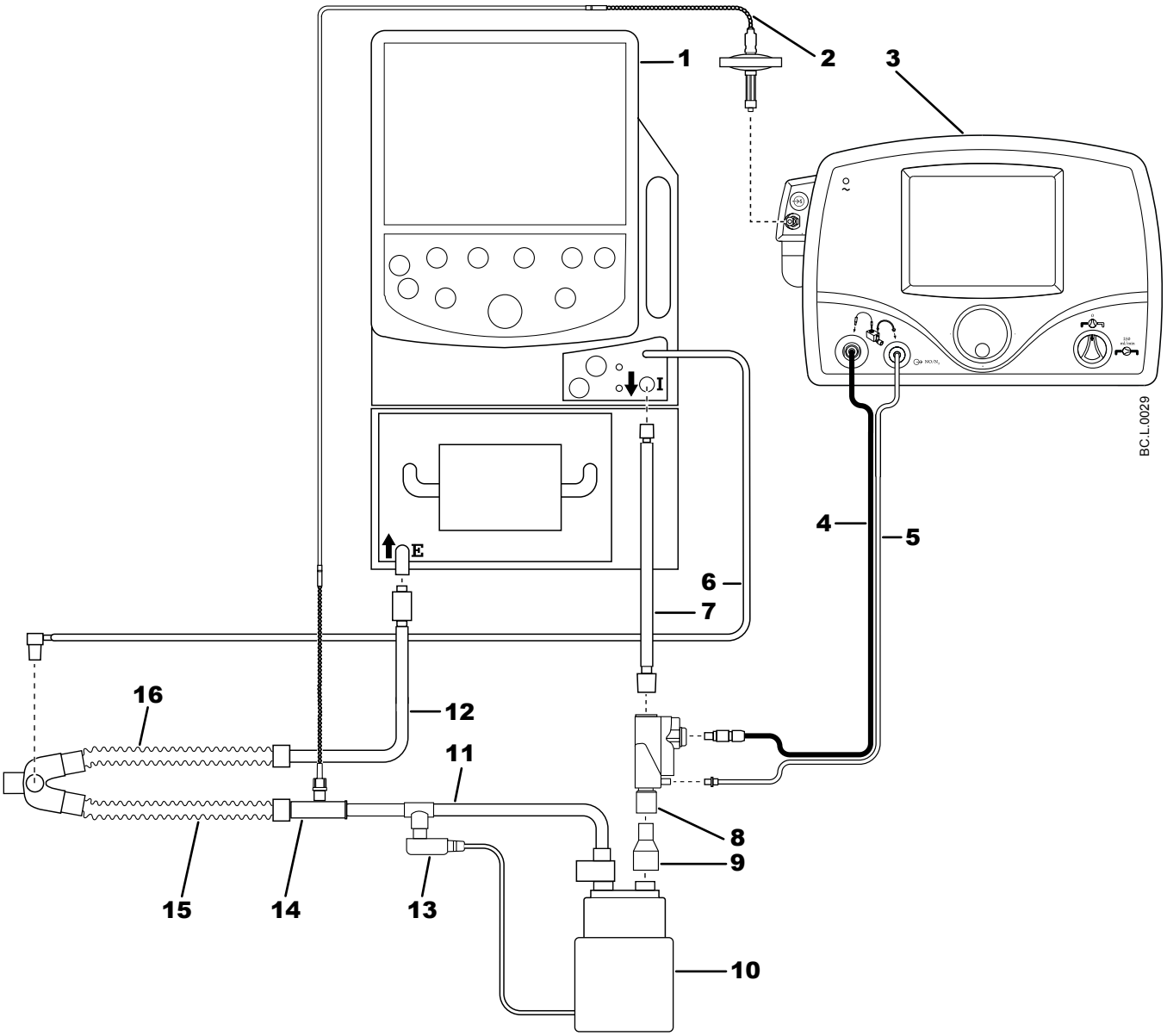

1. Humming HMX
2. Patient Gas Sample Line and Filter
3. INOmax DS_{IR} Plus
4. Injector Module Electrical Cable
5. NO/N2 Injector Tube
6. Proximal Pressure Tubing
7. Humidification Tubing
8. Injector Module
9. 22F X 15M Adapter
10. Humidifier
11. Inspiratory Tubing
12. Expiratory Tubing
13. Temperature Probe
14. Gas Sample Tee with Luer Connector
15. Inspiratory Breathing Circuit Hose
16. Expiratory Breathing Circuit Hose

Figure D-9 Humming HMX Ventilator (conventional mode) circuit diagram

D.3.2 Humming HMX During HFOV Mode

WARNING

Do not use a one-way valve as this will interrupt the pressure safety release of the Humming HMX and is not allowed by the ventilator manufacturer.

CAUTION

During use in the HFOV mode, place the Injector Module on inspiratory outlet.

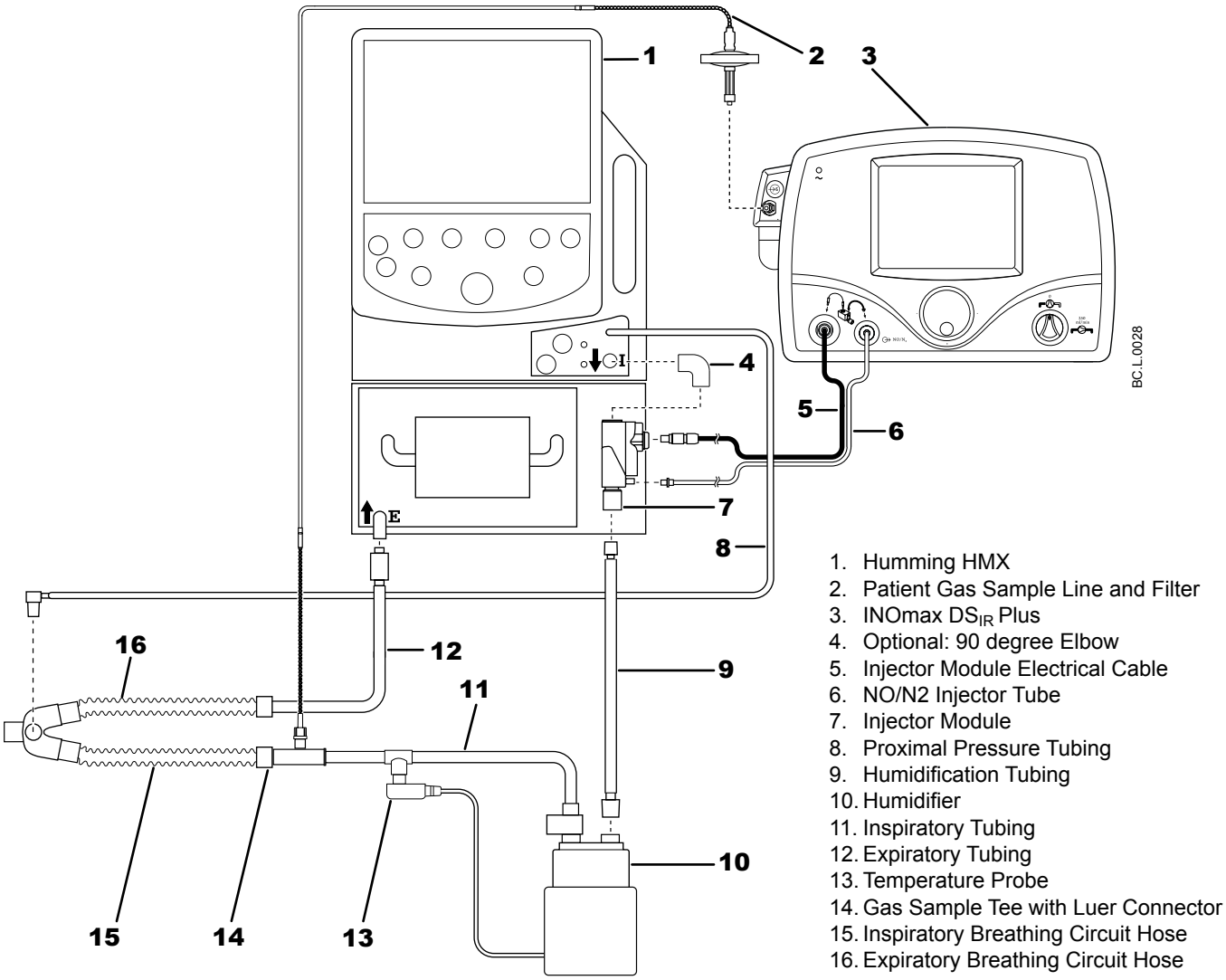

1. Humming HMX
2. Patient Gas Sample Line and Filter
3. INOmax DS_{IR} Plus
4. Optional: 90 degree Elbow
5. Injector Module Electrical Cable
6. NO/N2 Injector Tube
7. Injector Module
8. Proximal Pressure Tubing
9. Humidification Tubing
10. Humidifier
11. Inspiratory Tubing
12. Expiratory Tubing
13. Temperature Probe
14. Gas Sample Tee with Luer Connector
15. Inspiratory Breathing Circuit Hose
16. Expiratory Breathing Circuit Hose

Figure D-10 Humming HMX Ventilator (HFOV mode only) circuit diagram

D.3.3 Humming Vue Ventilator (Disposable Circuit)

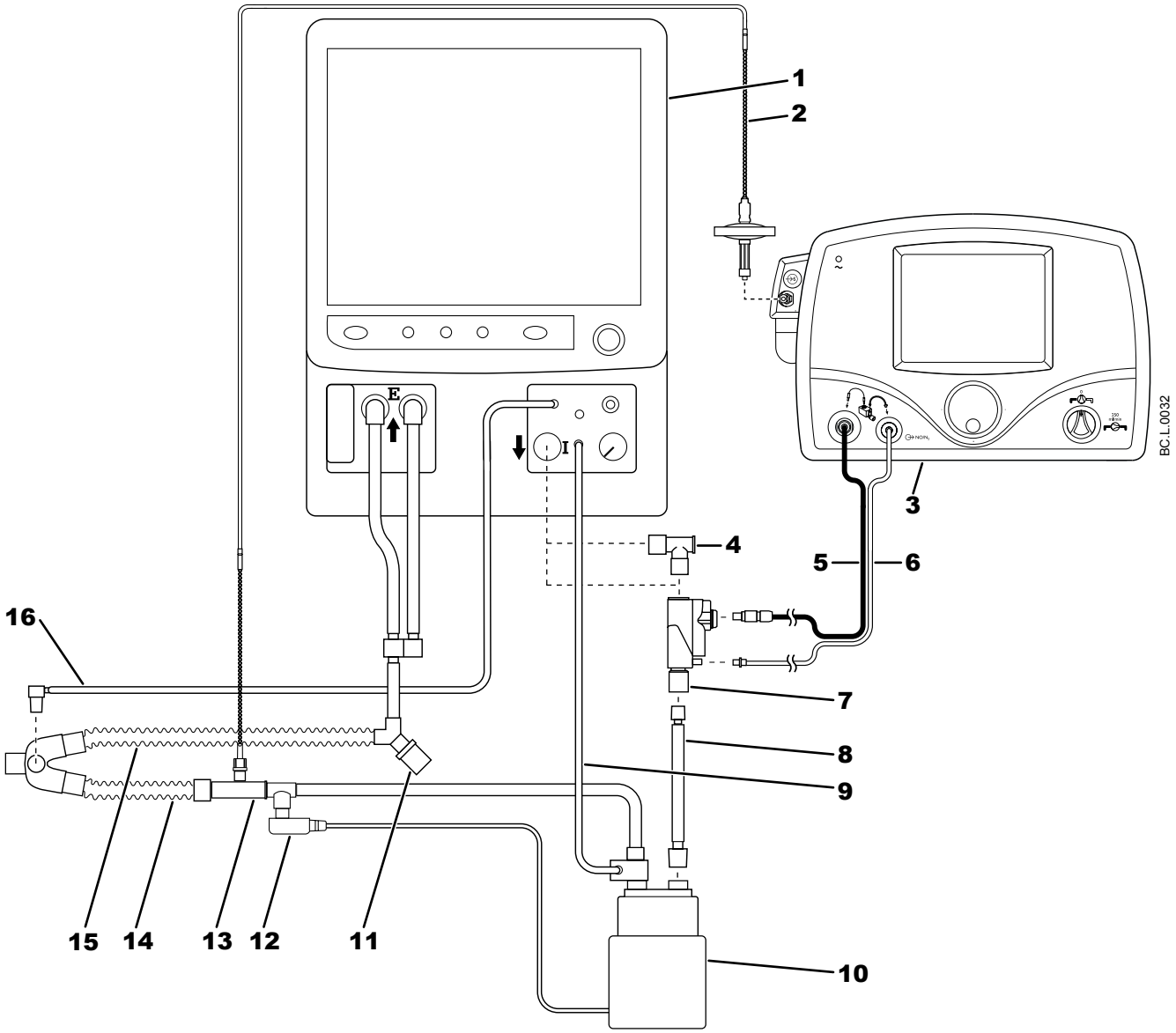

1. Humming Vue
2. Patient Gas Sample Line and Filter
3. INOmax DS_{IR} Plus
4. 90 degree Elbow (Optional)
5. Injector Module Electrical Cable
6. NO/N2 Injector Tube
7. Injector Module
8. Humidification Tubing
9. Impedance Valve Tubing
10. Humidifier
11. Water Trap
12. Temperature Probe
13. Gas Sample Tee with Luer Connector
14. Inspiratory Tubing
15. Expiratory Tubing
16. Proximal Pressure Tubing

Figure D-11 Humming Vue Ventilator circuit diagram (with disposable circuit option)

D.3.4 Humming Vue Ventilator (Non-Disposable Circuit)

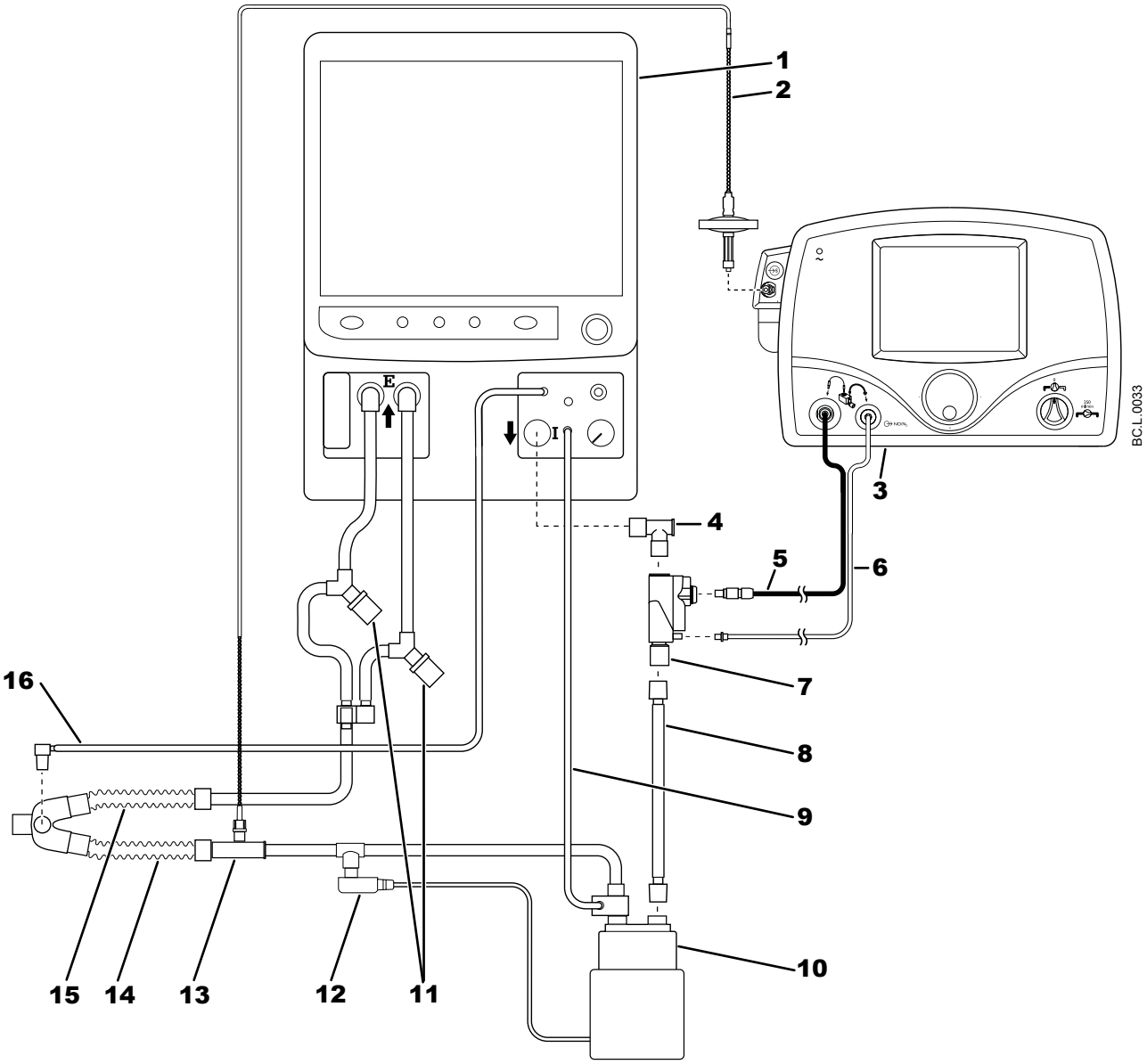

1. Humming Vue
2. Patient Gas Sample Line and Filter
3. INOmax DS_{IR} Plus
4. 90 degree Elbow
5. Injector Module Electrical Cable
6. NO/N2 Injector Tube
7. Injector Module
8. Humidification Tubing
9. Impedance Valve Tubing
10. Humidifier
11. Water Trap
12. Temperature Probe
13. Gas Sample Tee with Luer Connector
14. Inspiratory Tubing
15. Expiratory Tubing
16. Proximal Pressure Tubing

Figure D-12 Humming Vue Ventilator circuit diagram (with non-disposable circuit option)

D.4 SLE

D.4.1 Life Support SLE5000, Conventional and HFOV Modes

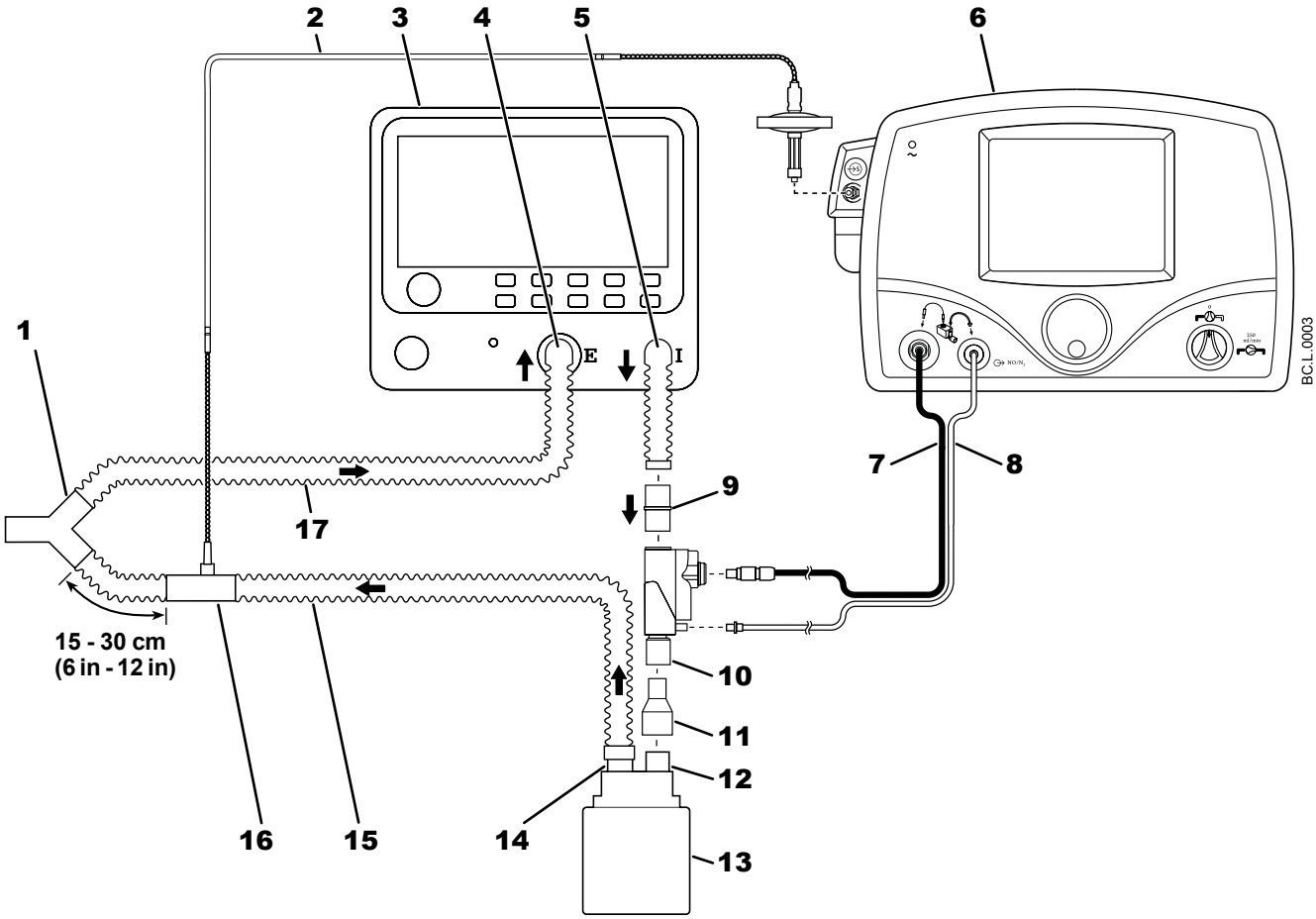

1. Patient Wye
2. Patient Gas Sample Line and Filter
3. SLE 5000 Ventilator
4. Ventilator Expiratory Port
5. Ventilator Inspiratory Port
6. INOmax DS_{IR} Plus
7. Injector Module Electrical Cable
8. NO/N2 Injector Tube
9. 22M/15F X 22M/15F Adapter
10. Injector Module
11. 22F X 15M Adapter
12. Humidifier Inlet
13. Humidifier
14. Humidifier Outlet
15. Inspiratory Breathing Circuit Hose
16. Gas Sample Tee
17. Expiratory Breathing Circuit Hose

Figure D-13 Life Support SLE5000 circuit diagram

E Appendix E - Gas Delivery Systems that Failed Testing

Table E-1 Gas Delivery Systems that did not Successfully Complete Validation Testing

Manufacturer	Model
Philips Healthcare (formerly Respironics)	BiPAP Vision
Percussionaire	Bronchotron-i
Drager	Oxylog 3000
Smiths Medical	paraPAC Medic 200D
Stephan	Sophie
Hill-Rom	MetaNeb

F Appendix F - Parts and Accessories

WARNING
Only use parts/accessories designated for use with this system.

Table F-1 INOmax DS_{IR} Plus Parts

Parts	Part Number
Sensor, O_2	80890
Sensor, NO	90844
Sensor, NO_2	90845
Tip, CGA 626 INOMAX Regulator	1605-3149-000
Water Bottle	90137

Table F-2 INOmax DS_{IR} Plus Patient Labeling

Labeling	Part Number
INOblender Operation and Maintenance Manual	20732
Operation and Maintenance Manual, English	21204
Operation and Maintenance Manual, French-Canadian	21368
Operation and Maintenance Manual, Spanish	21369

Table F-3 INOmax DS_{IR} Plus Patient Circuit Accessories

Accessories	Part Number
Calibration Gas Regulator, for NO or NO_2 Calibration Gas	90439
Calibration Tubing Kit	50239
Clamp Assembly	10008
Injector Module	1605-3038-000
Injector Module (new design)	90849
Injector Module Cable	90838
INOcal Calibration Gas, NO, 45 ppm	BOM-COM-0159
INOcal Calibration Gas, NO_2, 10 ppm	BOM-COM-0167
INOcal Regulator Kit	10090
INOmax DS_{IR} Cart	10018
INOMAX Regulator, CGA 626	10006
INOMAX Regulator Extension Hose	10014
INOMAX Transport Regulator/Cap Assembly	10022
Mounting Post	10009
Transport Mounting Bracket Assembly	50041

Table F-3 INOmax DS$_{IR}$ Plus Patient Circuit Accessories, continued

Disposables	Description
AD.L.0001	Adapter 15M Fits 4.5 mm ID Tubing
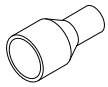 AD.L.0002	Adapter, 22F X 15M
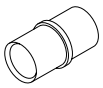 AD.L.0003	Adapter, 22M/15F X 22M/15F
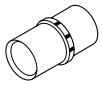 AD.L.0004	Adapter, Cuff, 22 mm ID X 22 mm ID
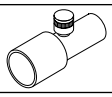 AD.L.0005	Adapter, Gas Sample Tee
AD.L.0006	Adapter, 90 degree Sample Port
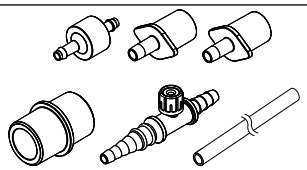 AD.L.0014	Bunnell Life Pulse Disposable Adapters Convenience Pack
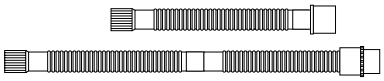 AD.L.0010	Neonatal Tubing, 10 mm (2 pieces)
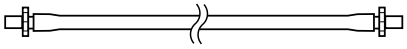 AD.L.0008	NO/N2 Injector Tube
AD.L.0017	One-way Valve, 22F X 22M
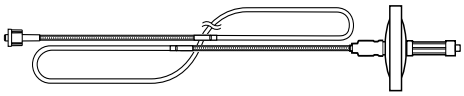 AD.L.0018	Patient Gas Sample Line and Filter
AD.L.0011	Pediatric Extension, 150 mm (six inches)
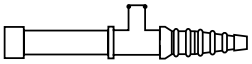 AD.L.0012	Sample Tee, O_2 Tubing
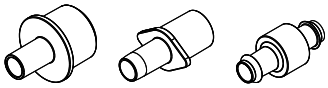 AD.L.0016	Sensormedics 3100A/B Filtered Circuit Disposable Adapters Convenience Pack
AD.L.0013	Water Separator Cartridge

NOTE: Physical appearance may vary slightly

Mallinckrodt™ Pharmaceuticals

INOmax DS_{IR} Plus Support

Mallinckrodt Pharmaceuticals provides technical support for the INOmax DS_{IR} Plus 7 days a week, 24 hours a day, 365 days a year in the United States and Canada. Technical support representatives can be reached at 1 877-KNOW-INO (1-877-566-9466).
For additional support materials, visit www.inomax.com.

Mallinckrodt Manufacturing LLC
6603 Femrite Drive,
Madison, WI 53718-6801 USA
877-566-9466

Part No. 21204 Rev-03
2024-06